DESIGN NOTES
■ FOR COMPLETE DESIGN AND PRODUCT INFORMATION CONTACT JENSEN PRECAST.
■ PIPE PENETRATIONS: CORED OPENINGS WITH A MAX SIZE OF 18" DIAMETER ALLOWED ON EACH SIDE. 2 OPENINGS ALLOWED ON END WALLS. ALL OPENINGS TO BE AT THE SAME ELEVATION.

BILL OF MATERIALS

ITEM	UNIT QTY	QTY	PART NUMBER	DESCRIPTION
1	1	1	400011798	REINFORCING MAT 400011798
2	93.194 ft^3	93.194 ft^3	100011429	CONCRETE MIX 7000 PSI
3	1	4	100004880	ANCHOR UTILITY .671DIA 5.625-SLAB GALV P75 6UA671

400011797.idw

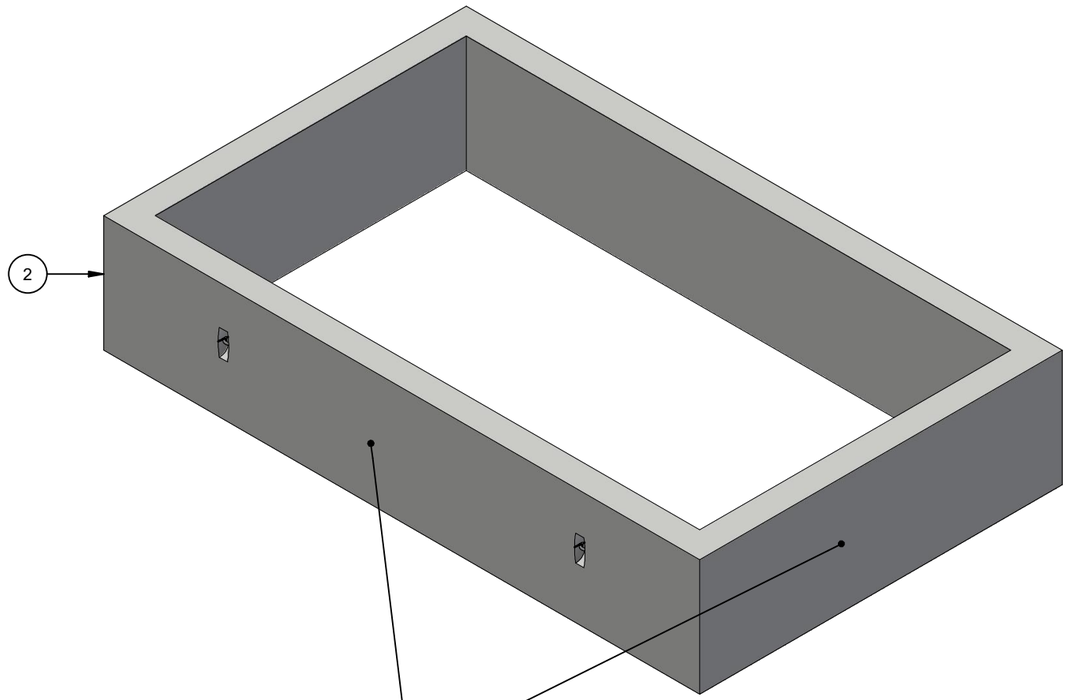

ISO LAYOUT

LIFTING NOTES
■ PLANT DEMOLDING AND FIELD INSTALLATION: MINIMUM HANDLING CONCRETE STRENGTH F'c = 2500 PSI WITH 4 CONNECTION POINTS AND RIGGING EQUALIZER REQUIRED TO EQUALIZE LOAD TO 2 LIFTING POINTS WITH A 90° SLING ANGLE.

CHANGE HISTORY			
NO.	DESCRIPTION	DATE	BY
1	2207-53084	9/26/2022	JW

BURY DEPTH:	0.9' - 0.9' to Top		
WATER LEVEL:	Below Structure	APPROX. WEIGHT:	14010.29 Lbs
DESIGN SPEC:	ASTM C890,ACI 318	LOADING SPEC:	A-16 (AASHTO HS20-44)
REINFORCEMENT TYPE:	Rebar	LIFTING TYPE:	A-Anchor

JENSEN PRECAST EST. 1968

WWW.JENSENPRECAST.COM

©2022 Jensen Precast- All rights reserved.
All materials appearing as Jensen Precast documents and the like are proprietary work product and are protected under U.S. copyright and other laws.
Unless in conjunction with business conducted with Jensen Precast, any use of Jensen Precast work product without express, written consent is prohibited, and recipient is prohibited from distributing any and all work product to non-approved third parties under penalty of civil action.

DESCRIPTION:	Riser 96168x36 Rect. Riser CASTING LAYOUT		REV: A-3
PART NUMBER:	400011797	DRAWN BY:	J. Warren
CREATED:	8/17/2022	MODIFIED:	9/26/2022
			SHEET: 1 OF 2

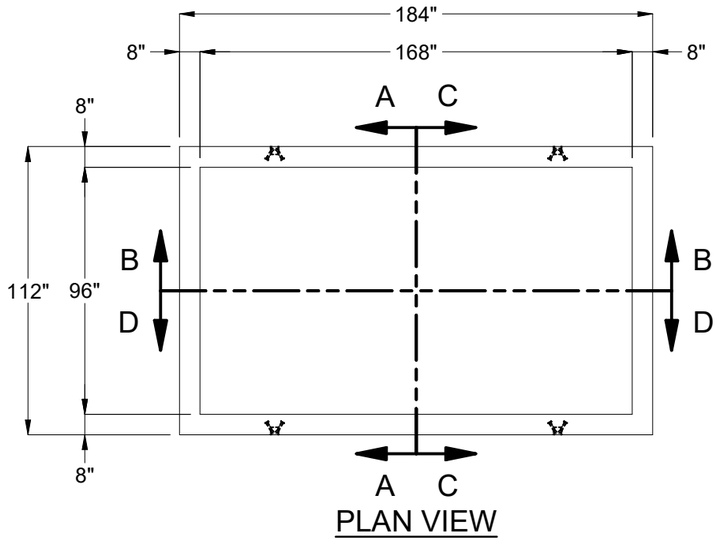

PLAN VIEW

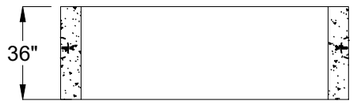

SECTION A-A

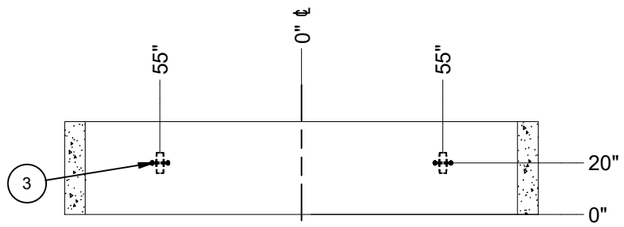

SECTION B-B

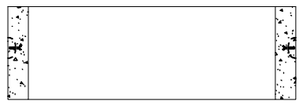

SECTION C-C

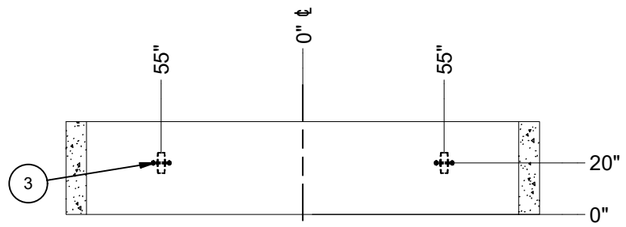

SECTION D-D

BURY DEPTH:	0.9' - 0.9' to Top		
WATER LEVEL:	Below Structure	APPROX. WEIGHT:	14010.29 Lbs
DESIGN SPEC:	ASTM C890,ACI 318	LOADING SPEC:	A-16 (AASHTO HS20-44)
REINFORCEMENT TYPE:	Rebar	LIFTING TYPE:	A-Anchor

JENSEN PRECAST EST. 1968

WWW.JENSENPRECAST.COM

©2022 Jensen Precast- All rights reserved.
All materials appearing as Jensen Precast documents and the like are proprietary work product and are protected under U.S. copyright and other laws.
Unless in conjunction with business conducted with Jensen Precast, any use of Jensen Precast work product without express, written consent is prohibited, and recipient is prohibited from distributing any and all work product to non-approved third parties under penalty of civil action.

DESCRIPTION:	Riser 96168x36 Rect. Riser CASTING DRAWING		REV: A-3
PART NUMBER:	400011797	DRAWN BY:	J. Warren
CREATED:	8/17/2022	MODIFIED:	9/26/2022

SHEET: 2 OF 2

400011797.idw