DESIGN NOTES
■ FOR COMPLETE DESIGN AND PRODUCT INFORMATION CONTACT JENSEN PRECAST.

BILL OF MATERIALS

ITEM	UNIT QTY	QTY	PART NUMBER	DESCRIPTION
1	1	1	400011795	REINFORCING MAT 400011795
2	1	1	400011796	REINFORCING MAT 400011796
3	64.696 ft^3	64.696 ft^3	100011429	CONCRETE MIX 7000 PSI
4	1	1	100040990	COVER 72144 ALUM HTD-3-CUSTOM H20 LW PRODUCTS
5	1	4	100007133	ANCHOR UTILITY .671DIA 7.625-SLAB GALV P75 8UA671

400011794.idw

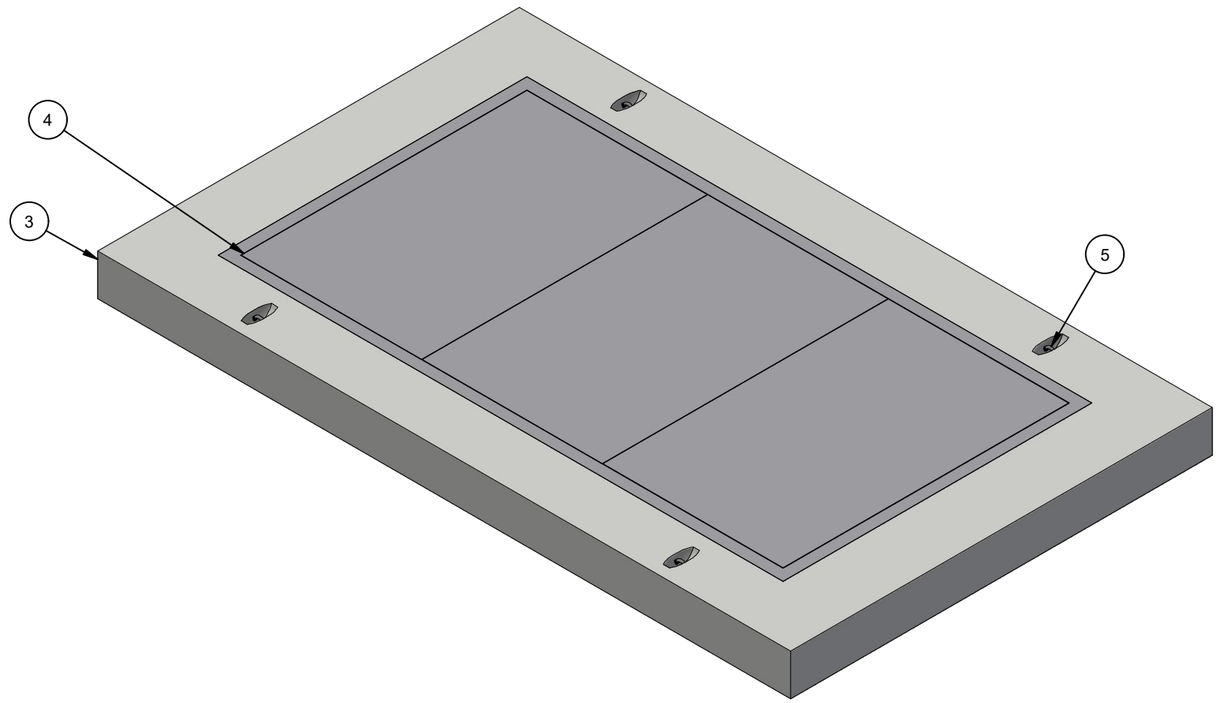

ISO LAYOUT

LIFTING NOTES
■ PLANT DEMOLDING AND FIELD INSTALLATION: MINIMUM HANDLING CONCRETE STRENGTH F'c = 3500 PSI RIGGING EQUALIZER REQUIRED TO EQUALIZE LOAD TO 4 LIFTING POINTS WITH A SLING ANGLE BETWEEN 60° AND 90°

CHANGE HISTORY			
NO.	DESCRIPTION	DATE	BY
1	2207-53084	9/26/2022	JW

BURY DEPTH:	0.0' - 0.0' to Top		
WATER LEVEL:	Below Structure	APPROX. WEIGHT:	11429.36 Lbs
DESIGN SPEC:	ASTM C890,ACI 318	LOADING SPEC:	A-16 (AASHTO HS20-44)
REINFORCEMENT TYPE:	Rebar	LIFTING TYPE:	A-Anchor

JENSEN PRECAST EST. 1968

WWW.JENSENPRECAST.COM

©2022 Jensen Precast- All rights reserved.
All materials appearing as Jensen Precast documents and the like are proprietary work product and are protected under U.S. copyright and other laws.
Unless in conjunction with business conducted with Jensen Precast, any use of Jensen Precast work product without express, written consent is prohibited, and recipient is prohibited from distributing any and all work product to non-approved third parties under penalty of civil action.

DESCRIPTION:	Vault 96168x12 Rect. Slab Top CASTING LAYOUT		REV: A-2
PART NUMBER:	400011794	DRAWN BY:	J. Warren
CREATED:	8/17/2022	MODIFIED:	9/26/2022
			SHEET: 1 OF 2

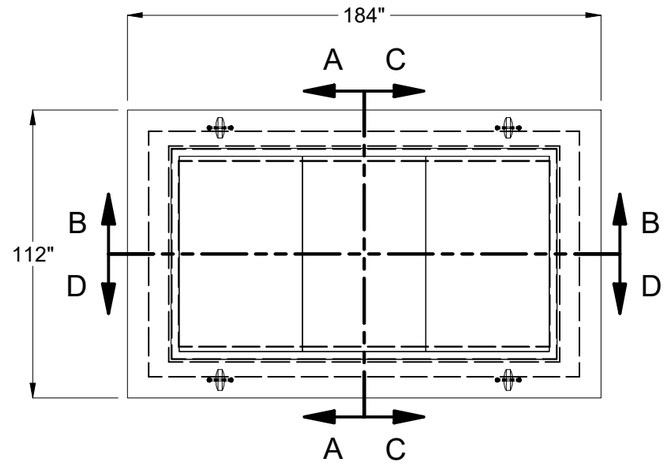

PLAN VIEW

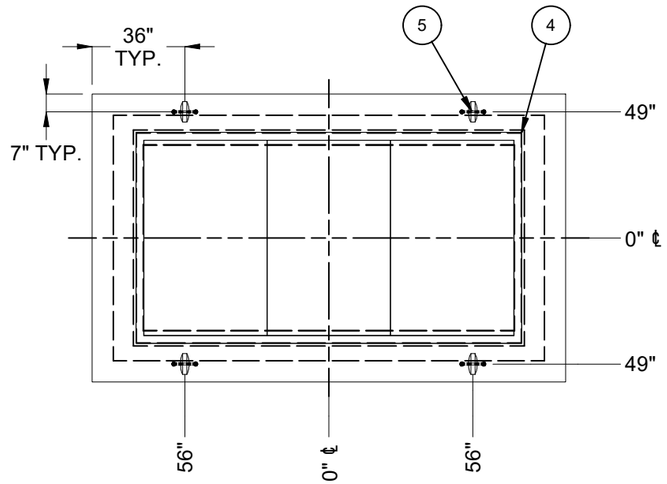

PLAN VIEW
(SHOWING OBJECT DIMENSIONS)

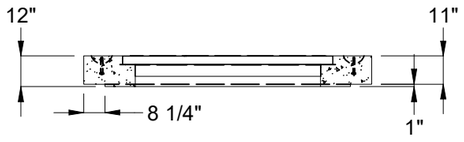

SECTION A-A



SECTION B-B



SECTION C-C

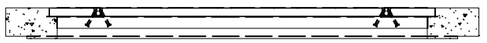

SECTION D-D

BURY DEPTH:	0.0' - 0.0' to Top		
WATER LEVEL:	Below Structure	APPROX. WEIGHT:	11429.36 Lbs
DESIGN SPEC:	ASTM C890,ACI 318	LOADING SPEC:	A-16 (AASHTO HS20-44)
REINFORCEMENT TYPE:	Rebar	LIFTING TYPE:	A-Anchor

JENSEN PRECAST EST. 1968

WWW.JENSENPRECAST.COM

©2022 Jensen Precast- All rights reserved.
All materials appearing as Jensen Precast documents and the like are proprietary work product and are protected under U.S. copyright and other laws.
Unless in conjunction with business conducted with Jensen Precast, any use of Jensen Precast work product without express, written consent is prohibited, and recipient is prohibited from distributing any and all work product to non-approved third parties under penalty of civil action.

DESCRIPTION:	Vault 96168x12 Rect. Slab Top CASTING DRAWING		REV: A-2
PART NUMBER:	400011794	DRAWN BY:	J. Warren
CREATED:	8/17/2022	MODIFIED:	9/26/2022

SHEET: 2 OF 2

400011794.idw