BILL OF MATERIALS				
ITEM	UNIT QTY	QTY	PART NUMBER	DESCRIPTION
1	1	1	400010544	Pad PD8484x6
2	1	1	200061340	Vault 7676x37 Rect. Bottom Section Knockout Sump

400010543.idw

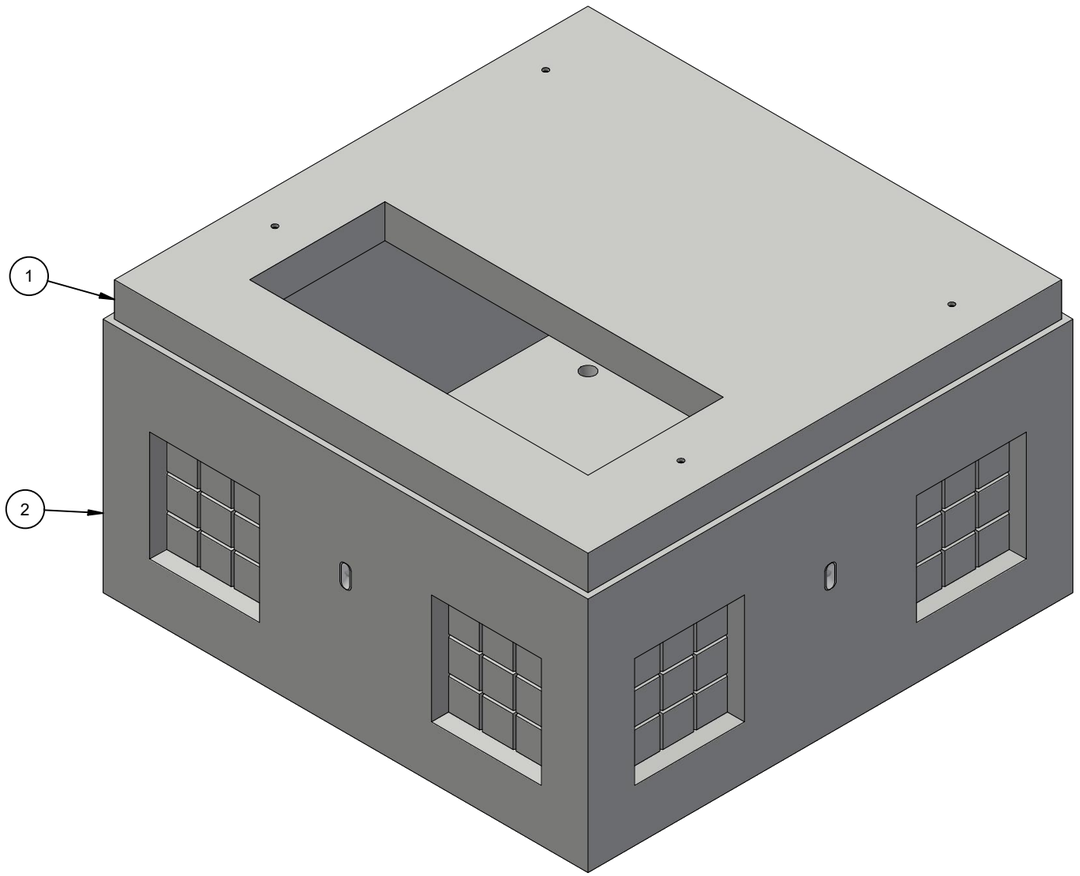

ISO LAYOUT

CHANGE HISTORY			
NO.	DESCRIPTION	DATE	BY
1	INITIAL RELEASE	3/28/2022	JW
2	ADDED BOTTLE ROCKET	4/26/2022	JW

BURY DEPTH:	0.0' - 0.0' to Top		
WATER LEVEL:	Below Structure	APPROX. WEIGHT:	10827.56 Lbs
DESIGN SPEC:	ASTM C857,ACI 318	LOADING SPEC:	A-03 (300 psf)
AGENCY:		AGENCY SPEC:	

JENSEN PRECAST EST. 1968

WWW.JENSENPRECAST.COM

©2022 Jensen Precast- All rights reserved.
All materials appearing as Jensen Precast documents and the like are proprietary work product and are protected under U.S. copyright and other laws.
Unless in conjunction with business conducted with Jensen Precast, any use of Jensen Precast work product without express, written consent is prohibited, and recipient is prohibited from distributing any and all work product to non-approved third parties under penalty of civil action.

DESCRIPTION:	Utility Vault 7676 Layout Assembly LAYOUT REVIEW		REV: B-1
PART NUMBER:	400010543	DRAWN BY:	J. Warren
CREATED:	3/15/2022	MODIFIED:	4/26/2022
			SHEET: 1 OF 2

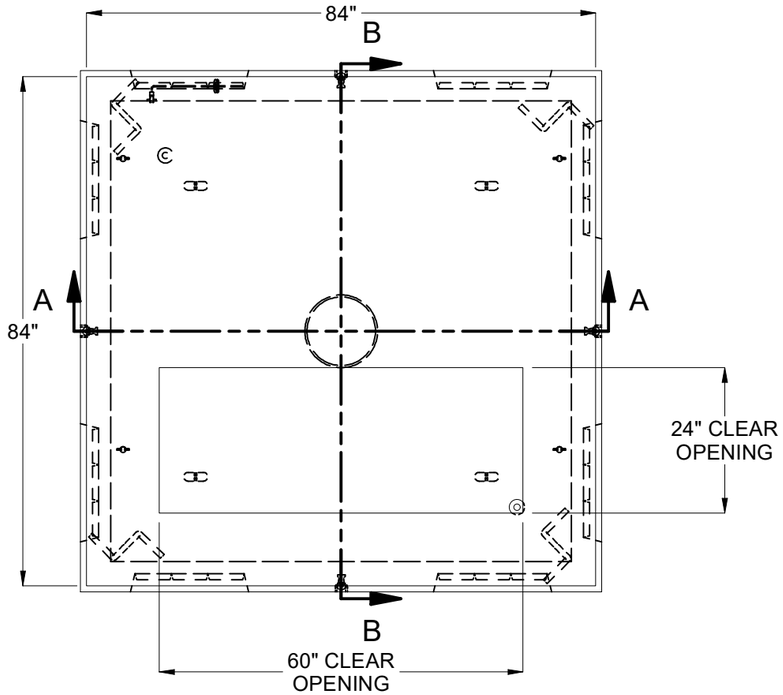

PLAN VIEW

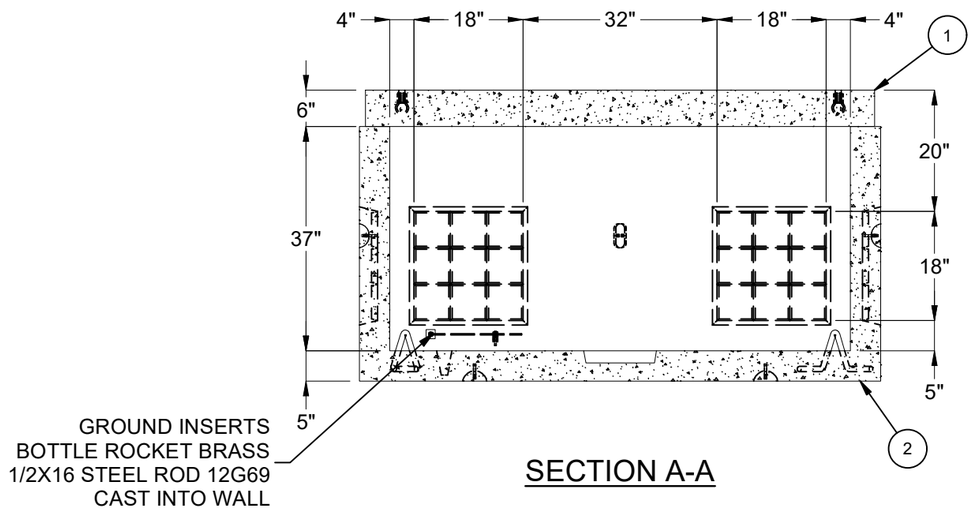

SECTION A-A

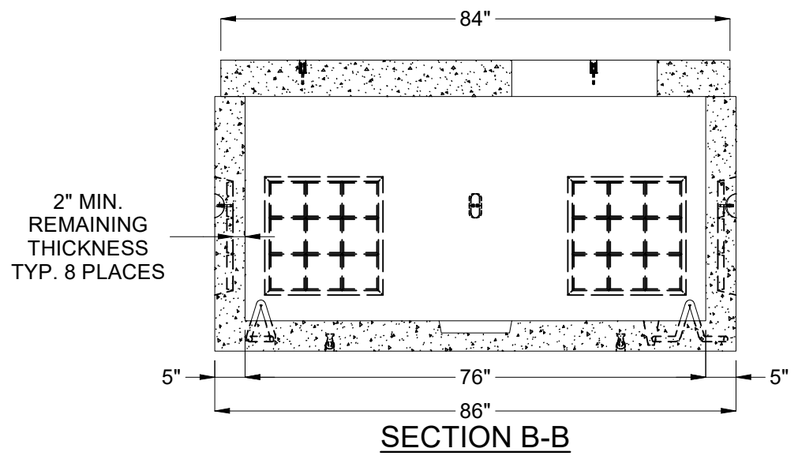

SECTION B-B

BURY DEPTH:	0.0' - 0.0' to Top		
WATER LEVEL:	Below Structure	APPROX. WEIGHT:	10827.56 Lbs
DESIGN SPEC:	ASTM C857,ACI 318	LOADING SPEC:	A-03 (300 psf)
AGENCY:		AGENCY SPEC:	

JENSEN PRECAST EST. 1968

WWW.JENSENPRECAST.COM

©2022 Jensen Precast- All rights reserved.
All materials appearing as Jensen Precast documents and the like are proprietary work product and are protected under U.S. copyright and other laws.
Unless in conjunction with business conducted with Jensen Precast, any use of Jensen Precast work product without express, written consent is prohibited, and recipient is prohibited from distributing any and all work product to non-approved third parties under penalty of civil action.

DESCRIPTION:	Utility Vault 7676 Layout Assembly LAYOUT REVIEW		REV: B-1
PART NUMBER:	400010543	DRAWN BY:	J. Warren
CREATED:	3/15/2022	MODIFIED:	4/26/2022

SHEET: 2 OF 2

400010543.idw