BILL OF MATERIALS			
ITEM	QTY	PART NUMBER	DESCRIPTION
1	1	100006903	CI COVER 36DIA B-5520 ASTM A48 CL35B CH 2-LS ELECTRIC
2	1	400008566	Vault 7272x61 Rect. Bottom Section
3	1	400008556	Vault 7272 x 8 Slab Top 36"C
4	1	100005768	CI RING 36DIA B-5520-R2 ASTM A-48 CL35B B/D 5-FLANGE DOWN

400008561.idw

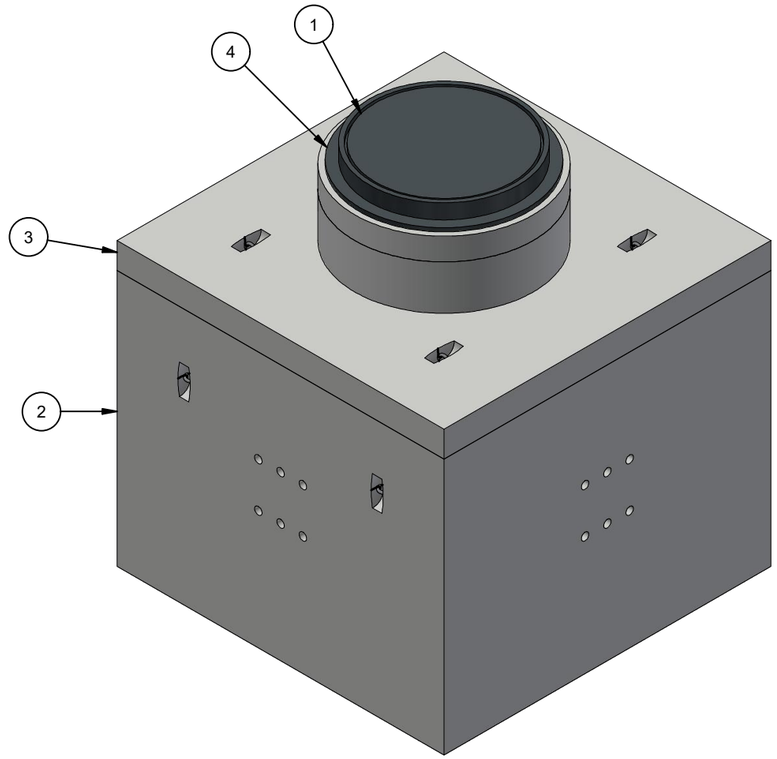

ISO LAYOUT

CHANGE HISTORY			
NO.	DESCRIPTION	DATE	BY
1	INITIAL RELEASE 2108-51422	08/20/2021	JW

BURY DEPTH:	0.0' - 3.0' to Top		
WATER LEVEL:	Below Structure	APPROX. WEIGHT:	25115.91 Lbs
DESIGN SPEC:	ASTM C857,ACI 318	LOADING SPEC:	A-16 (AASHTO HS20-44)
AGENCY:		AGENCY SPEC:	

JENSEN PRECAST EST. 1968

WWW.JENSENPRECAST.COM

©2021 Jensen Precast- All rights reserved.
All materials appearing as Jensen Precast documents and the like are proprietary work product and are protected under U.S. copyright and other laws.
Unless in conjunction with business conducted with Jensen Precast, any use of Jensen Precast work product without express, written consent is prohibited, and recipient is prohibited from distributing any and all work product to non-approved third parties under penalty of civil action.

DESCRIPTION:	Utility Vault 7272 Layout Assembly LAYOUT REVIEW		REV: A-2
PART NUMBER:	400008561	DRAWN BY:	J. Warren
CREATED:	8/19/2021	MODIFIED:	9/9/2021
			SHEET: 1 OF 2

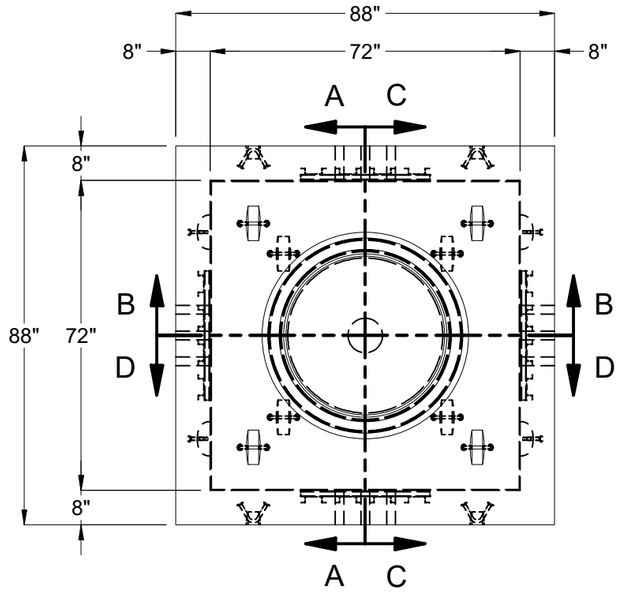

PLAN VIEW

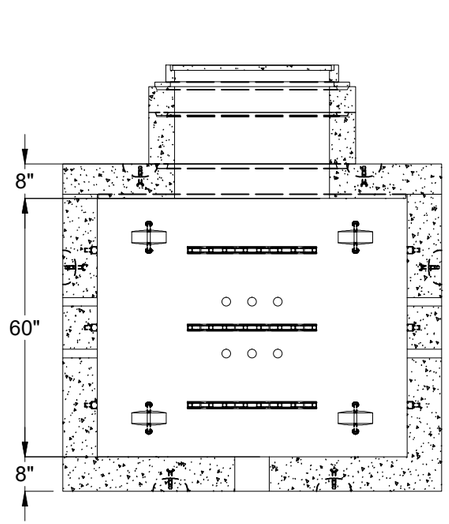

SECTION A-A

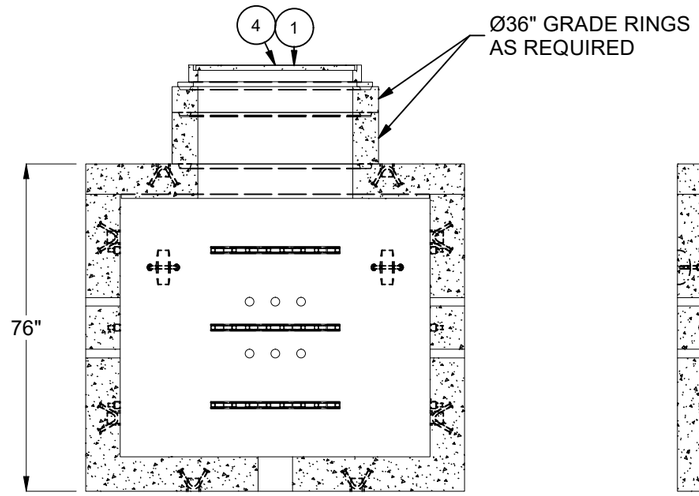

SECTION B-B

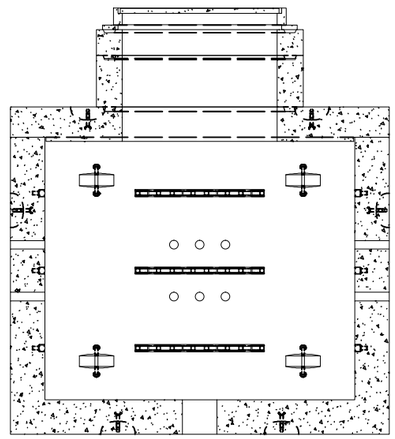

SECTION C-C

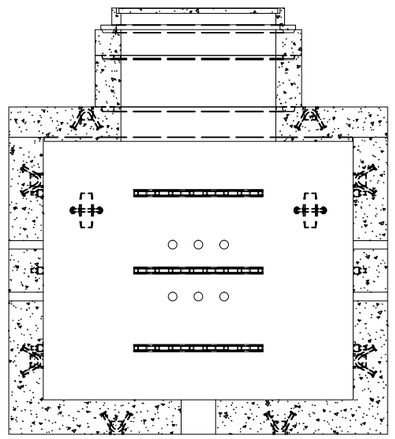

SECTION D-D

BURY DEPTH:	0.0' - 3.0' to Top		
WATER LEVEL:	Below Structure	APPROX. WEIGHT:	25115.91 Lbs
DESIGN SPEC:	ASTM C857,ACI 318	LOADING SPEC:	A-16 (AASHTO HS20-44)
AGENCY:		AGENCY SPEC:	

JENSEN PRECAST EST. 1968

WWW.JENSENPRECAST.COM

©2021 Jensen Precast- All rights reserved.
All materials appearing as Jensen Precast documents and the like are proprietary work product and are protected under U.S. copyright and other laws.
Unless in conjunction with business conducted with Jensen Precast, any use of Jensen Precast work product without express, written consent is prohibited, and recipient is prohibited from distributing any and all work product to non-approved third parties under penalty of civil action.

DESCRIPTION:	Utility Vault 7272 Layout Assembly LAYOUT REVIEW		REV: A-2
PART NUMBER:	400008561	DRAWN BY:	J. Warren
CREATED:	8/19/2021	MODIFIED:	9/9/2021

SHEET: 2 OF 2

400008561.idw