DESIGN NOTES:

- CONCRETE SHALL HAVE A 28 DAY MINIMUM COMPRESSIVE STRENGTH OF 5000 PSI
- SOIL UNIT WEIGHT DRY - 110 lbs/cu.ft.
- EQUIVALENT LATERAL PRESSURE DRY - 40 lbs/cu.ft.
- SOIL UNIT WEIGHT WET - 120 lbs/cu.ft.
- EQUIVALENT LATERAL PRESSURE WET - 80 lbs/cu.ft.

PRODUCTION NOTES:

- THIS PRODUCT SHALL ONLY BE PRODUCED IN A JENSEN INFRASTRUCTURE FACILITY
- LIFTING INSERTS SHALL BE INSTALLED PER MANUFACTURER'S REQUIREMENTS
- APPLIED FINISH - NONE
- INTERNAL LINER/COATING - NONE
- EXTERNAL LINER/COATING - NONE

BILL OF MATERIALS

ITEM	UNIT QTY	QTY	PART NUMBER	DESCRIPTION
1	16.722 ft^3	16.722 ft^3	100011425	CONCRETE MIX 5000 PSI
2	1	20	100003011	TERMINATOR DUCT WITH SEAL 3IN SHORT T3000
3	1	8	100002866	ANCHOR DOGBONE P52 2T X 2-3/4" GALV
4	1	1	300167248	REINFORCING MAT 300167248

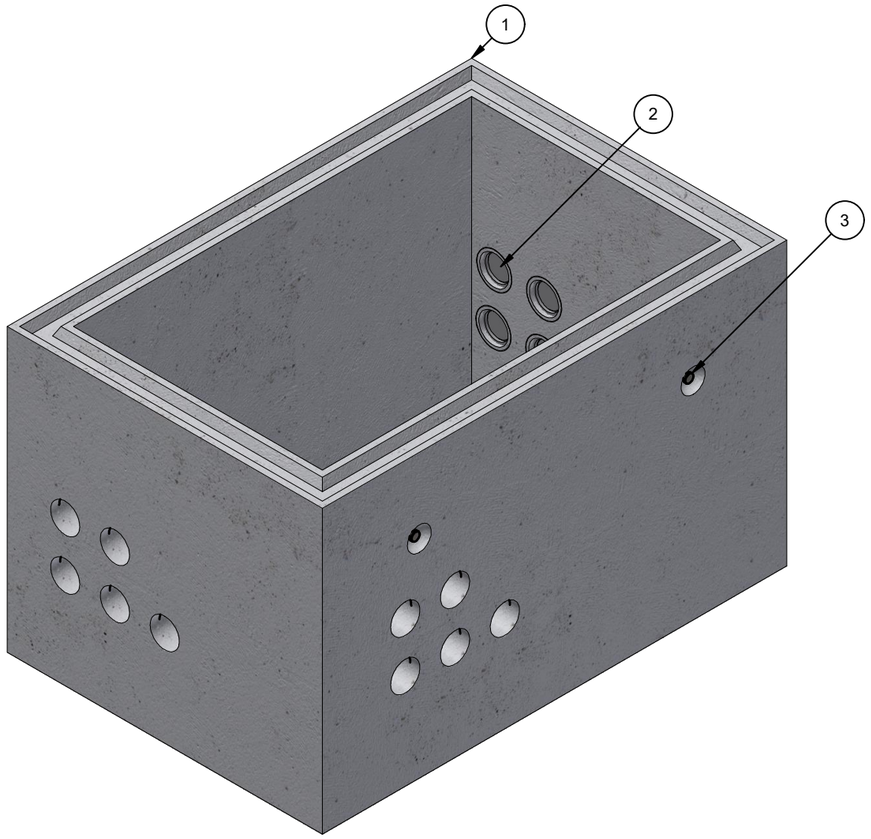

ISO LAYOUT

400008082.idw

LIFTING NOTES
■ THIS CONCRETE PRODUCT IS DESIGNED TO BE LIFTED AT 2500 PSI WITH 4 LIFT CONNECTIONS EQUALLY LOADED TO 2 LIFTING POINTS AT A MINIMUM 60° SLING ANGLE, MEASURED FROM HORIZONTAL.
*All rigging shall be design by a qualified professional. Loading diagrams show illustrations of possible rigging setups to achieve the required sling angle and load leg equalization. Other valid rigging configurations are possible. A qualified professional must be consulted prior to lifting.

RIGGING DIAGRAM*	B

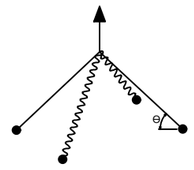

BURY DEPTH:	0.0' - 5.0' to Top		
WATER LEVEL:	5.0'	APPROX. WEIGHT:	2552.75 Lbs
DESIGN SPEC:	ACI 318,ASTM C857	LOADING SPEC:	A-16 (AASHTO HS20-44)
REINFORCEMENT TYPE:	Rebar	LIFTING TYPE:	Dogbone

Infrastructure
JENSEN
WWW.JENSENINFRASTRUCTURE.COM

©2026 Jensen Infrastructure - All rights reserved.
All materials appearing as Jensen Infrastructure documents and the like are proprietary work product and are protected under U.S. copyright and other laws.
Unless in conjunction with business conducted with Jensen Infrastructure , any use of Jensen Infrastructure work product without express, written consent is prohibited, and recipient is prohibited from distributing any and all work product to non-approved third parties under penalty of civil action.
This product shall only be produced in a Jensen Infrastructure facility.

CHANGE HISTORY			
NO.	DESCRIPTION	DATE	BY
1	INITIAL RELEASE	08/31/2021	JW
2	ALIGNED TERMINATORS	7/13/2026	AMV
3	INCREASED FLOOR REINFORCING	7/21/2026	AMV

DESCRIPTION: Vault 3048x30 Rect. Bottom Section Terminators Sump Overton Power Extra Small CASTING LAYOUT				REV: B-1-1
PART NUMBER:	400008082	DRAWN BY:	A. Viveiros	SHEET: 1 OF 2
CREATED:	6/18/2021	MODIFIED:	7/21/2026	

FEATURES		
ID	DESCRIPTION	QTY
A	Ø9" x 2 5/8" Deep Sump	1

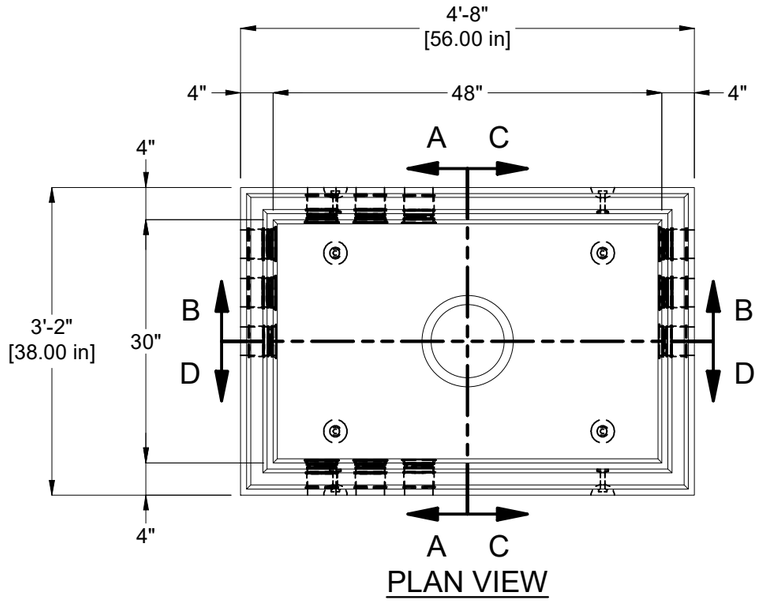

PLAN VIEW

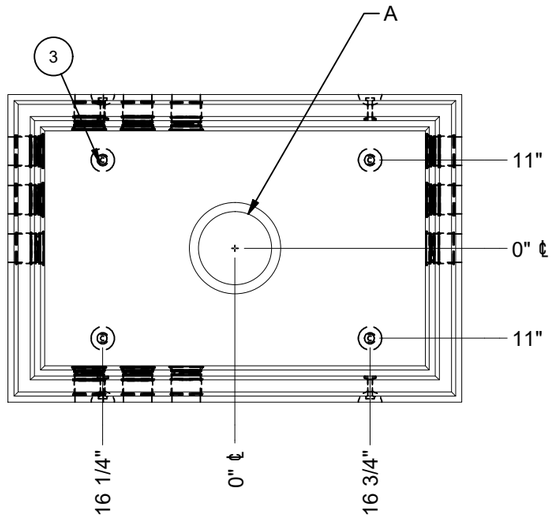

PLAN VIEW
(SHOWING OBJECT DIMENSIONS)

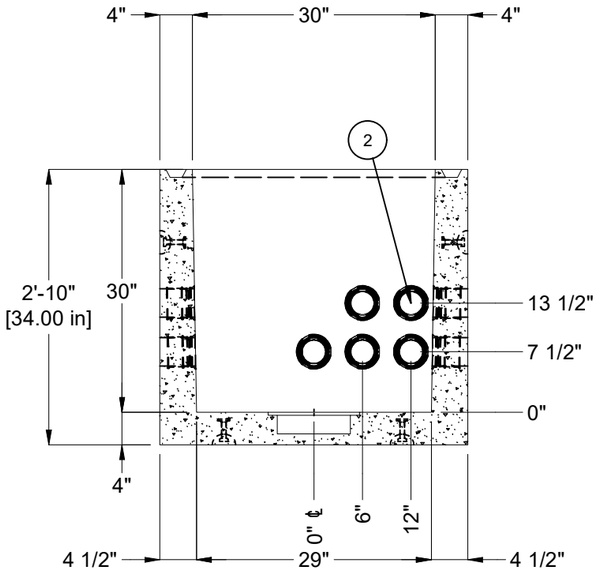

SECTION A-A

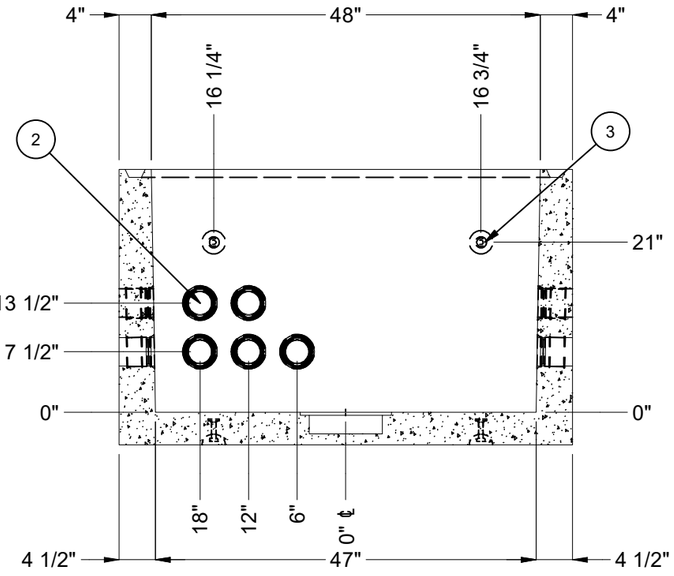

SECTION B-B

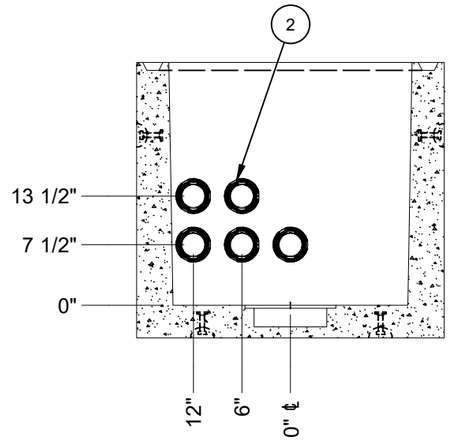

SECTION C-C

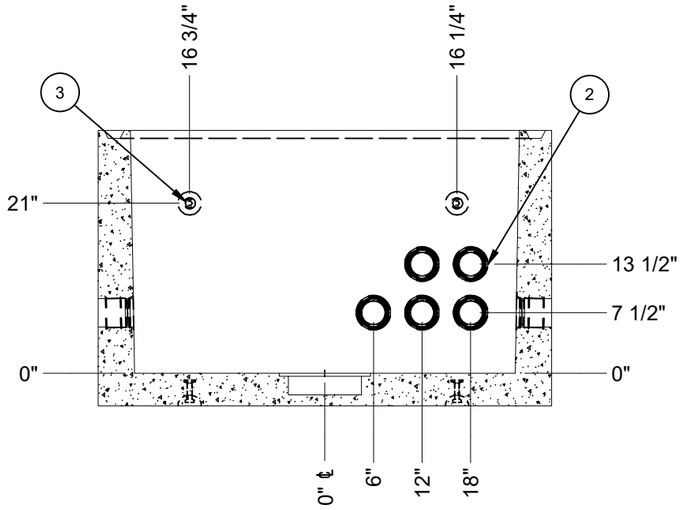

SECTION D-D

BURY DEPTH:	0.0' - 5.0' to Top		
WATER LEVEL:	5.0'	APPROX. WEIGHT:	2552.75 Lbs
DESIGN SPEC:	ACI 318,ASTM C857	LOADING SPEC:	A-16 (AASHTO HS20-44)
REINFORCEMENT TYPE:	Rebar	LIFTING TYPE:	Dogbone

Infrastructure
JENSEN
WWW.JENSENINFRASTRUCTURE.COM

©2026 Jensen Infrastructure - All rights reserved.
All materials appearing as Jensen Infrastructure documents and the like are proprietary work product and are protected under U.S. copyright and other laws.
Unless in conjunction with business conducted with Jensen Infrastructure , any use of Jensen Infrastructure work product without express, written consent is prohibited, and recipient is prohibited from distributing any and all work product to non-approved third parties under penalty of civil action.
This product shall only be produced in a Jensen Infrastructure facility.

DESCRIPTION:
Vault 3048x30 Rect. Bottom Section Terminators Sump Overton Power Extra Small
CASTING DRAWING

REV: B-1-1

PART NUMBER:	400008082	DRAWN BY:	A. Viveiros
CREATED:	6/18/2021	MODIFIED:	7/21/2026

SHEET: 2 OF 2

400008082.idw