DESIGN NOTES:

- CONCRETE SHALL HAVE A 28 DAY MINIMUM COMPRESSIVE STRENGTH OF
- SOIL UNIT WEIGHT DRY - 110 lbs/cu.ft.
- EQUIVALENT LATERAL PRESSURE DRY - 40 lbs/cu.ft.
- SOIL UNIT WEIGHT WET - 120 lbs/cu.ft.
- EQUIVALENT LATERAL PRESSURE WET - 80 lbs/cu.ft.

PRODUCTION NOTES:

- THIS PRODUCT SHALL ONLY BE PRODUCED IN A JENSEN INFRASTRUCTURE FACILITY
- LIFTING INSERTS SHALL BE INSTALLED PER MANUFACTURER'S REQUIREMENTS
- APPLIED FINISH -
- INTERNAL LINER/COATING - Paint - White Latex
- EXTERNAL LINER/COATING - NONE

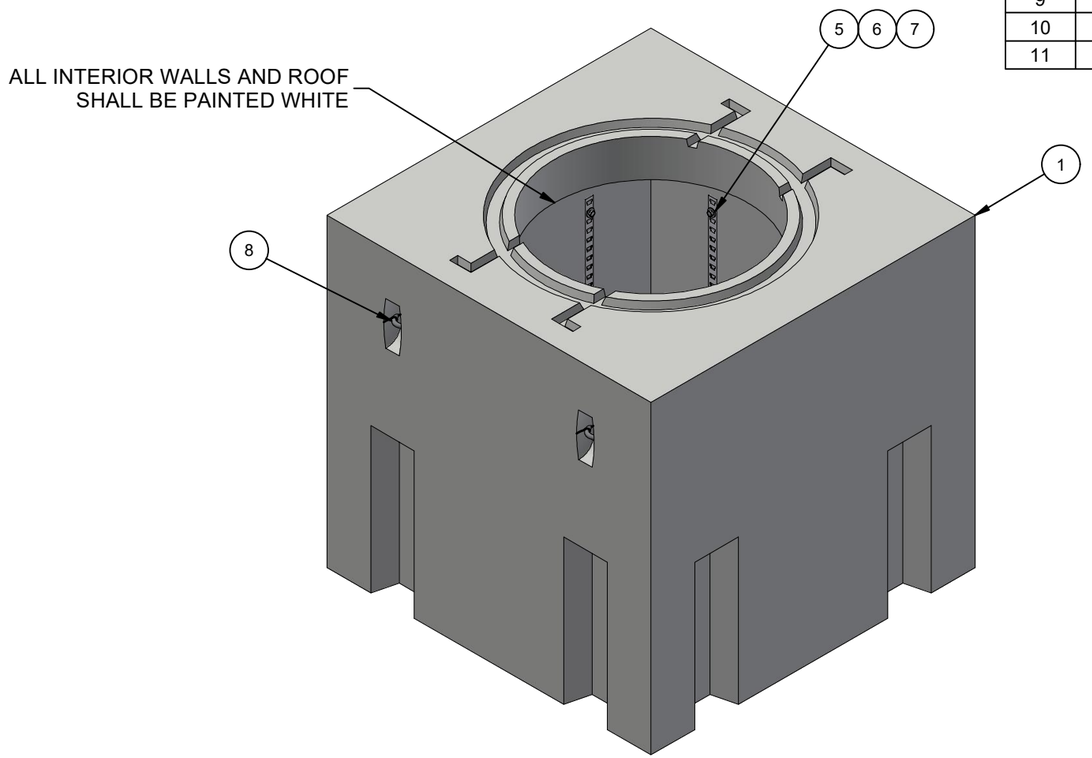

BILL OF MATERIALS

ITEM	QTY	PART NUMBER	DESCRIPTION
1	47.284 ft^3	100011425	CONCRETE MIX 5000 PSI
2	16	100012720	INSERT PLASTIC W/ BREAK OFF SNAP 0.5IN
3	2	100005928	INSERT FERRULE LOOP 1/4 X 2-3/4 PLATED F42
4	2	100005931	GROUND INSERTS BOTTLE ROCKET BRASS 1/4X16 STEEL ROD 12D69
5	8	100002528	CABLE RACK SUPPORT 22-HOLE GALV
6	16	100013415	MACHINE BOLT 1/2-13 UNRC-2A 2IN HDG
7	16	100008814	WASHER FLAT 1/2 REGULAR TYPE A GALV
8	4	100004880	ANCHOR UTILITY .671DIA 5.625-SLAB GALV P75 6UA671
9	1.250 gal	100006420	COATING PAINT LATEX WHITE
10	1	300124652	REINFORCING MAT 300124652
11	2	100007387	1/2" GROUND INSERT WIRE ROPE CLAMP GALV

400003239.idw

ISO LAYOUT

RIGGING DIAGRAM*	B

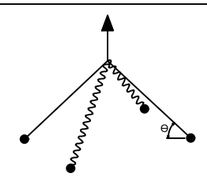

LIFTING NOTES

■ THIS CONCRETE PRODUCT IS DESIGNED TO BE LIFTED AT 2500 PSI WITH 4 LIFT CONNECTIONS EQUALLY LOADED TO 2 LIFTING POINTS AT A MINIMUM 60° SLING ANGLE, MEASURED FROM HORIZONTAL.

*All rigging shall be design by a qualified professional. Loading diagrams show illustrations of possible rigging setups to achieve the required sling angle and load leg equalization. Other valid rigging configurations are possible. A qualified professional must be consulted prior to lifting.

BURY DEPTH:	0.8' - 5.0' to Top		
WATER LEVEL:	3.5'	APPROX. WEIGHT:	7135.94 Lbs
DESIGN SPEC:	ACI 318,ASTM C857	LOADING SPEC:	A-16 (AASHTO HS20-44)
REINFORCEMENT TYPE:	Rebar	LIFTING TYPE:	A-Anchor

Infrastructure
JENSEN
WWW.JENSENPRECAST.COM

©2025 Jensen Infrastructure - All rights reserved.
All materials appearing as Jensen Infrastructure documents and the like are proprietary work product and are protected under U.S. copyright and other laws.
Unless in conjunction with business conducted with Jensen Infrastructure , any use of Jensen Infrastructure work product without express, written consent is prohibited, and recipient is prohibited from distributing any and all work product to non-approved third parties under penalty of civil action. This product shall only be produced in a Jensen Infrastructure facility.

CHANGE HISTORY

NO.	DESCRIPTION	DATE	BY
A	DRAWING CREATED	4/10/2020	T.Larson
B	LIFTING UPDATED/ HARDWARE ADDED	2/22/2021	MRV
C	1/2" GROUND INSERT WIRE CLAMP ADDED / DRAWING UPDATED	9/22/2025	HA

DESCRIPTION: Intercept 4848x50 Rect. Top Section 36"C AT&T Int. Paint - White Latex

CASTING LAYOUT

REV: B-2-1

PART NUMBER:	400003239	DRAWN BY:	H.Alnuaimi
CREATED:	2/22/2021	MODIFIED:	9/22/2025

SHEET: 1 OF 2

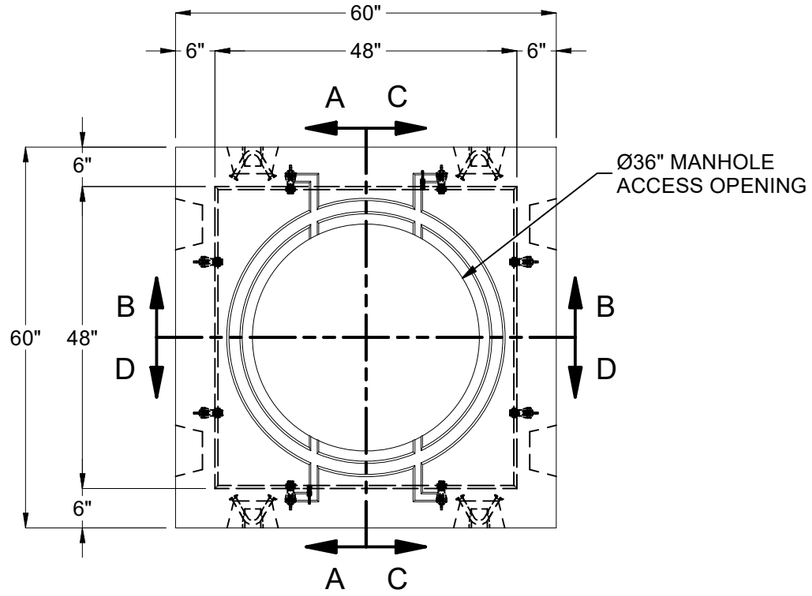

PLAN VIEW

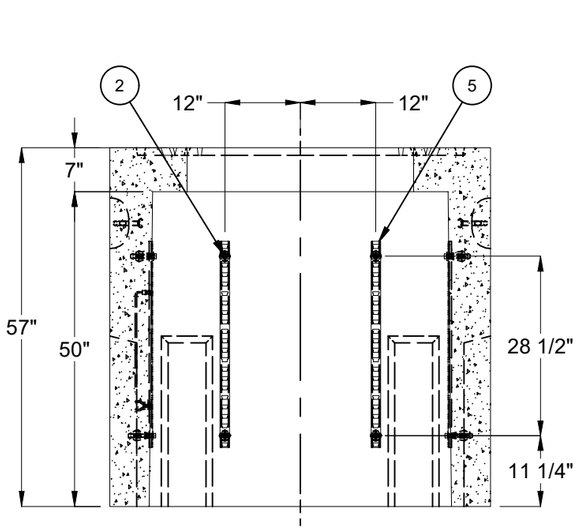

SECTION A-A

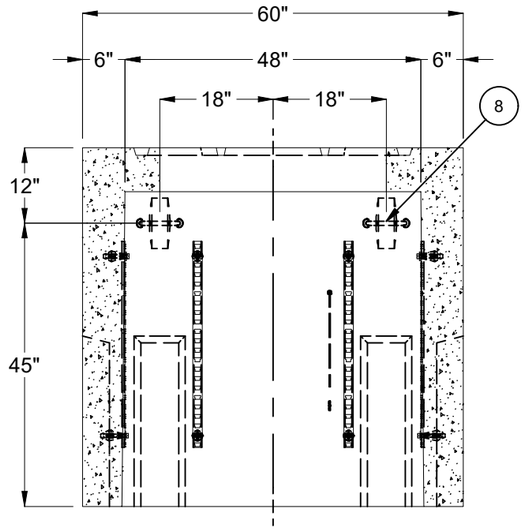

SECTION B-B

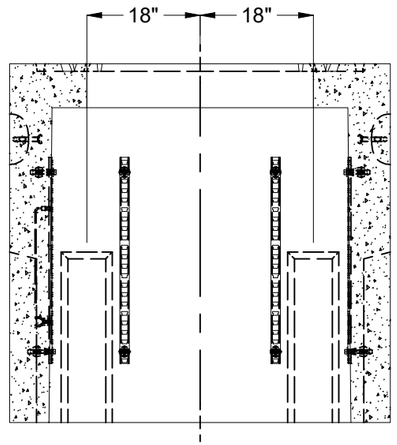

SECTION C-C

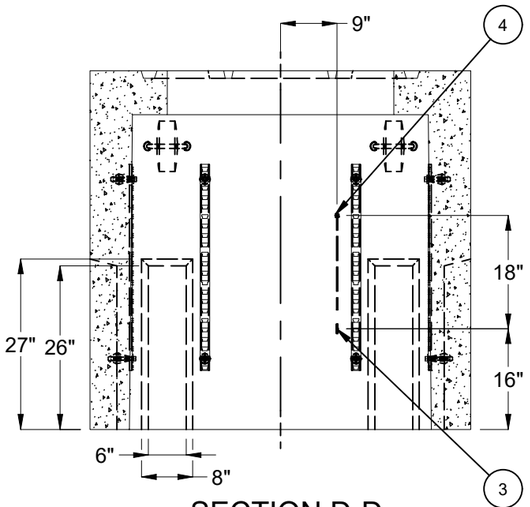

SECTION D-D

BURY DEPTH:	0.8' - 5.0' to Top		
WATER LEVEL:	3.5'	APPROX. WEIGHT:	7135.94 Lbs
DESIGN SPEC:	ACI 318,ASTM C857	LOADING SPEC:	A-16 (AASHTO HS20-44)
REINFORCEMENT TYPE:	Rebar	LIFTING TYPE:	A-Anchor

Infrastructure
JENSEN
WWW.JENSENPRECAST.COM

©2025 Jensen Infrastructure - All rights reserved.
All materials appearing as Jensen Infrastructure documents and the like are proprietary work product and are protected under U.S. copyright and other laws.
Unless in conjunction with business conducted with Jensen Infrastructure , any use of Jensen Infrastructure work product without express, written consent is prohibited, and recipient is prohibited from distributing any and all work product to non-approved third parties under penalty of civil action. This product shall only be produced in a Jensen Infrastructure facility.

DESCRIPTION:	Intercept 4848x50 Rect. Top Section 36"C AT&T Int. Paint - White Latex CASTING DRAWING		REV: B-2-1
PART NUMBER:	400003239	DRAWN BY:	H.Alnuaimi
CREATED:	2/22/2021	MODIFIED:	9/22/2025
			SHEET: 2 OF 2

400003239.idw