DESIGN NOTES
■ FOR COMPLETE DESIGN AND PRODUCT INFORMATION CONTACT JENSEN PRECAST.

BILL OF MATERIALS

ITEM	QTY	PART NUMBER	DESCRIPTION
1	1.416 ft^3	100011425	CONCRETE MIX 5000 PSI
2	4	100002854	INSERT MH RUNG PLASTIC SP SOCKET
3	1	400002147	REINFORCING MAT 400002147

*REBAR REINFORCING CAN BE SWAPPED OUT FOR DEFORMED WIRE CAGE PART NUMBER 200035820

400002146.idw

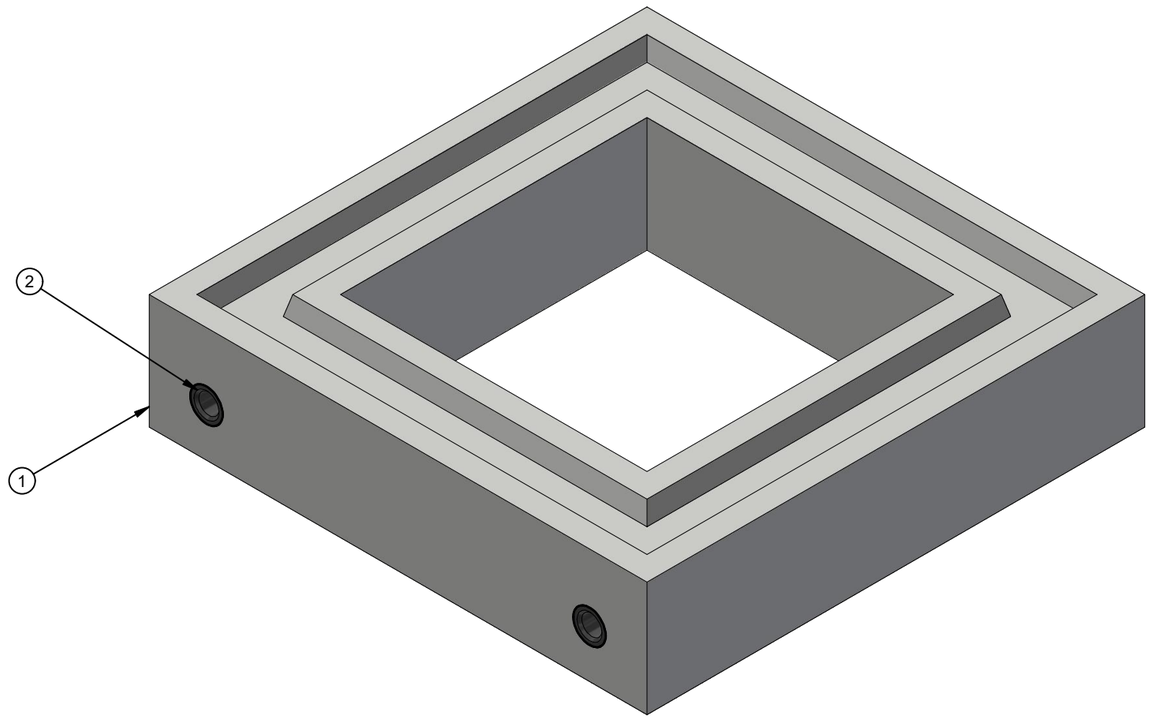

ISO LAYOUT

LIFTING NOTES
■ PLANT DEMOLDING AND FIELD INSTALLATION: MINIMUM HANDLING CONCRETE STRENGTH F'c = 3000 PSI RIGGING EQUALIZER REQUIRED TO EQUALIZE LOAD TO 2 LIFTING POINTS WITH A SLING ANGLE BETWEEN 60° AND 90°

BURY DEPTH:	0.0' - 12.5' to Top		
WATER LEVEL:	5.0'	WEIGHT:	213.08 Lbs
DESIGN SPEC:	ASTM C890,ACI 318	LOADING SPEC:	A-16 (AASHTO HS20-44)
REINFORCEMENT TYPE:	Rebar	LIFTING TYPE:	SP Socket

JENSEN PRECAST EST. 1968

WWW.JENSENPRECAST.COM

©2021 Jensen Precast- All rights reserved.
All materials appearing as Jensen Precast documents and the like are proprietary work product and are protected under U.S. copyright and other laws.
Unless in conjunction with business conducted with Jensen Precast, any use of Jensen Precast work product without express, written consent is prohibited, and recipient is prohibited from distributing any and all work product to non-approved third parties under penalty of civil action.

REVISION HISTORY			
REV	DESCRIPTION	DATE	BY
A	DRAWING CREATED	2/10/2020	J. Hillman

DESCRIPTION:	Riser 1616x6 Rect. Riser CASTING LAYOUT		REV: A
PART NUMBER:	400002146	DRAWN BY:	J. Hillman
CREATED:	2/10/2020	MODIFIED:	5/24/2021
			SHEET: 1 OF 2

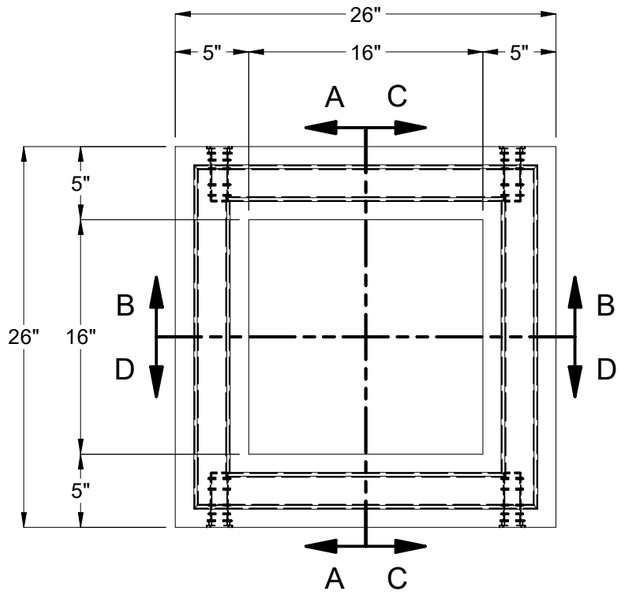

PLAN VIEW



SECTION A-A

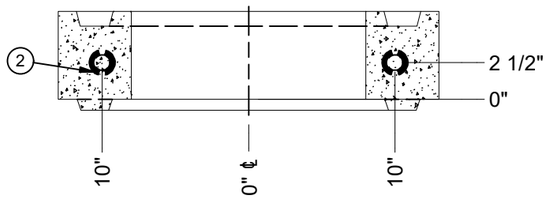

SECTION B-B



SECTION C-C

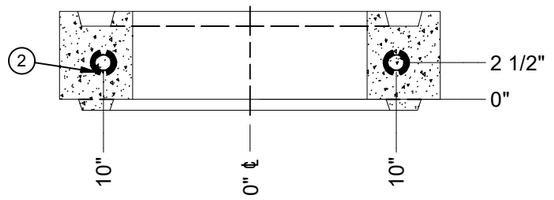

SECTION D-D

BURY DEPTH:	0.0' - 12.5' to Top		
WATER LEVEL:	5.0'	WEIGHT:	213.08 Lbs
DESIGN SPEC:	ASTM C890,ACI 318	LOADING SPEC:	A-16 (AASHTO HS20-44)
REINFORCEMENT TYPE:	Rebar	LIFTING TYPE:	SP Socket

JENSEN PRECAST EST. 1968

WWW.JENSENPRECAST.COM

©2021 Jensen Precast- All rights reserved.
All materials appearing as Jensen Precast documents and the like are proprietary work product and are protected under U.S. copyright and other laws.
Unless in conjunction with business conducted with Jensen Precast, any use of Jensen Precast work product without express, written consent is prohibited, and recipient is prohibited from distributing any and all work product to non-approved third parties under penalty of civil action.

DESCRIPTION:	Riser 1616x6 Rect. Riser CASTING DRAWING		REV: A
PART NUMBER:	400002146	DRAWN BY:	J. Hillman
CREATED:	2/10/2020	MODIFIED:	5/24/2021
			SHEET: 2 OF 2

400002146.idw