DESIGN NOTES
■ CONFORMS TO PGE SPECIFICATION L26100 DATED 12-11-2018
■ FOR COMPLETE DESIGN AND PRODUCT INFORMATION CONTACT JENSEN PRECAST

BILL OF MATERIALS

ITEM	UNIT QTY	QTY	PART NUMBER	DESCRIPTION
1	1.875 ft^3	1.875 ft^3	100011425	CONCRETE MIX 5000 PSI
2	1	3	100002949	ANCHOR CABLE LOOP LIFT 1/4 X 8-1/4
3	1	1	400001785	REINFORCING MAT 400001785

400001784.idw

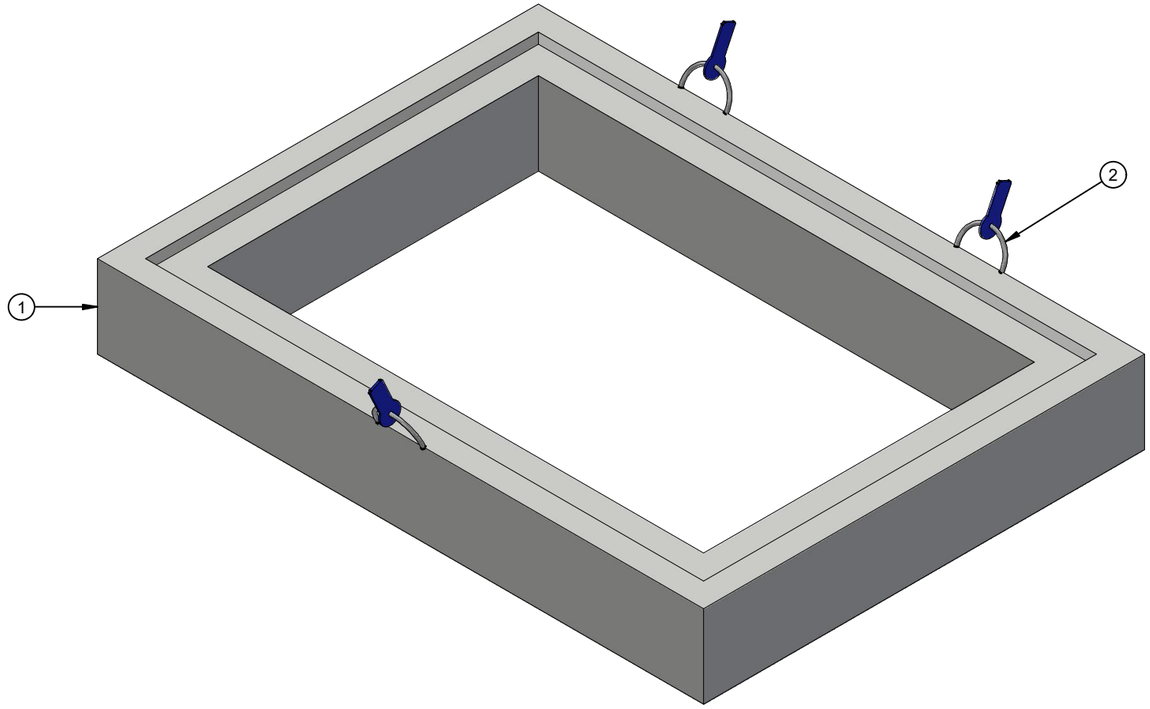

ISO LAYOUT

LIFTING NOTES
■ PLANT DEMOLDING AND FIELD INSTALLATION: MINIMUM HANDLING CONCRETE STRENGTH F'c = 2500 PSI RIGGING EQUALIZER REQUIRED TO EQUALIZE LOAD TO 3 LIFTING POINTS WITH A SLING ANGLE BETWEEN 60° AND 90°

REVISION HISTORY			
REV	DESCRIPTION	DATE	BY
B	CHANGED KEYWAY	1/28/2021	BGD
B-2	UPDATED LIFTERS TO CABLE LOOPS	11/14/22	MGL

BURY DEPTH:	0.0' - 5.0' to Top of Section		
WATER LEVEL:	5.0'	WEIGHT:	283.2 Lbs
DESIGN SPEC:	ASTM C857,ACI 318	LOADING SPEC:	A-16 (AASHTO HS20-44)
REINFORCEMENT TYPE:	Rebar	LIFTING TYPE:	Cable

JENSEN PRECAST EST. 1968

WWW.JENSENPRECAST.COM

©2019 Jensen Precast- All rights reserved.
All materials appearing as Jensen Precast documents and the like are proprietary work product and are protected under U.S. copyright and other laws.
Unless in conjunction with business conducted with Jensen Precast, any use of Jensen Precast work product without express, written consent is prohibited, and recipient is prohibited from distributing any and all work product to non-approved third parties under penalty of civil action.

DESCRIPTION:	Pull Box 2436x6 Rect. Riser CASTING LAYOUT		REV: B-5
PART NUMBER:	400001784	DRAWN BY:	M. Lincoln
CREATED:	11/21/2019	MODIFIED:	12/6/2022
			SHEET: 1 OF 2

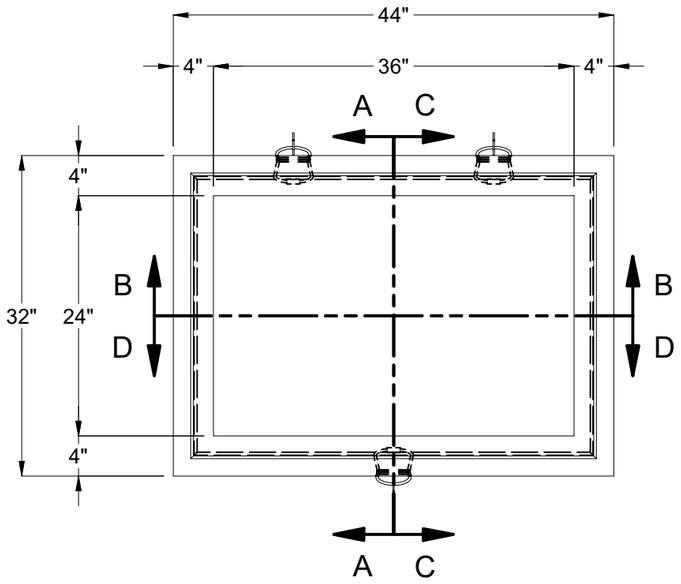

PLAN VIEW

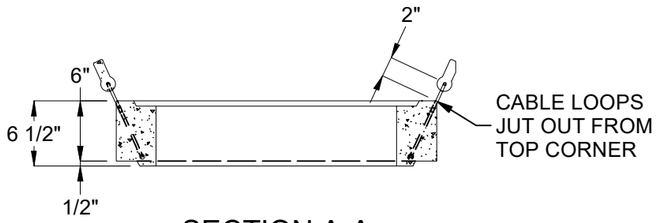

SECTION A-A

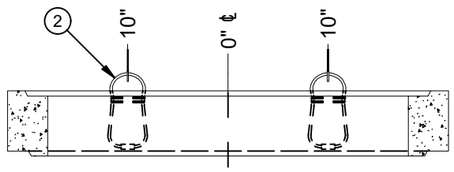

SECTION B-B

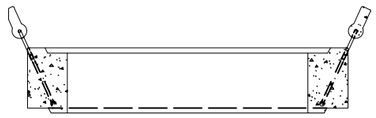

SECTION C-C

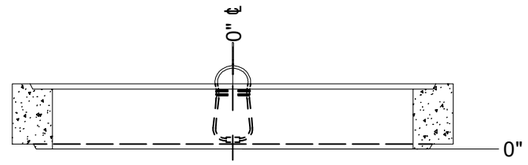

SECTION D-D

BURY DEPTH:	0.0' - 5.0' to Top of Section		
WATER LEVEL:	5.0'	WEIGHT:	283.2 Lbs
DESIGN SPEC:	ASTM C857,ACI 318	LOADING SPEC:	A-16 (AASHTO HS20-44)
REINFORCEMENT TYPE:	Rebar	LIFTING TYPE:	Cable

JENSEN PRECAST EST. 1968

WWW.JENSENPRECAST.COM

©2019 Jensen Precast- All rights reserved.
All materials appearing as Jensen Precast documents and the like are proprietary work product and are protected under U.S. copyright and other laws.
Unless in conjunction with business conducted with Jensen Precast, any use of Jensen Precast work product without express, written consent is prohibited, and recipient is prohibited from distributing any and all work product to non-approved third parties under penalty of civil action.

DESCRIPTION:	Pull Box 2436x6 Rect. Riser CASTING DRAWING		REV: B-5
PART NUMBER:	400001784	DRAWN BY:	M. Lincoln
CREATED:	11/21/2019	MODIFIED:	12/6/2022
			SHEET: 2 OF 2

400001784.idw