DESIGN NOTES
■ CONFORMS TO PGE SPECIFICATION L26100 DATED 12-11-2018
■ FOR COMPLETE DESIGN AND PRODUCT INFORMATION CONTACT JENSEN PRECAST.

BILL OF MATERIALS

ITEM	UNIT QTY	QTY	PART NUMBER	DESCRIPTION
1	10.141 ft^3	10.141 ft^3	100011425	CONCRETE MIX 5000 PSI
2	1	1	400001739	REINFORCING MAT 400001739
3	1	1	100031278	PLATE 2x3 BRASS
4	1	2	100002765	INSERT FERRULE LOOP 1/2 X 2-3/4 PLATED FX-5
5	1	2	100002766	INSERT FERRULE LOOP 5/8 X 3-1/2 PLATED FX-5
6	1	2	100034833	ANCHOR RAPID LIFT TECH 2.5T CLUTCH 2.4375IN LONG MB RL-25

400001738.idw

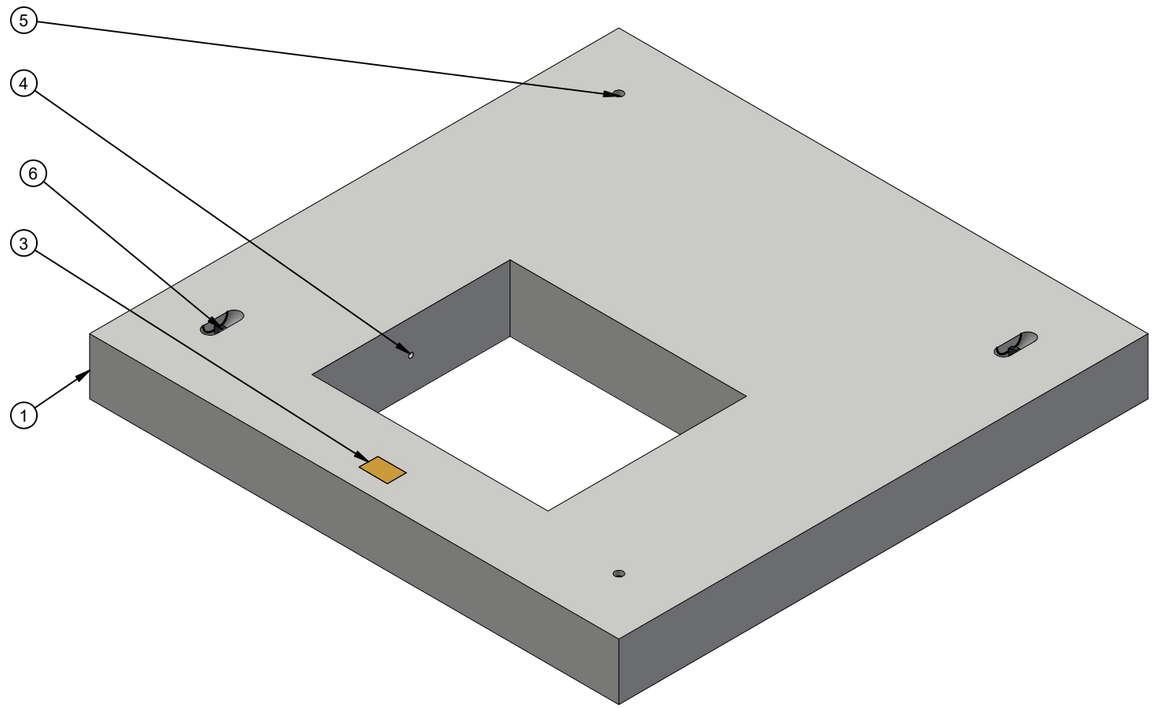

ISO LAYOUT

LIFTING NOTES
■ PLANT DEMOLDING AND FIELD INSTALLATION: MINIMUM HANDLING CONCRETE STRENGTH F'c = 2500 PSI RIGGING EQUALIZER REQUIRED TO EQUALIZE LOAD TO 2 LIFTING POINTS WITH A SLING ANGLE BETWEEN 60° AND 90°

BURY DEPTH:	0.0' - 0.0' to Top		
WATER LEVEL:	Below Structure	WEIGHT:	1529.79 Lbs
DESIGN SPEC:	ASTM C857,ACI 318	LOADING SPEC:	A-16 (AASHTO HS20-44)
REINFORCEMENT TYPE:	Rebar	LIFTING TYPE:	

JENSEN PRECAST EST. 1968

WWW.JENSENPRECAST.COM

©2019 Jensen Precast- All rights reserved.
All materials appearing as Jensen Precast documents and the like are proprietary work product and are protected under U.S. copyright and other laws.
Unless in conjunction with business conducted with Jensen Precast, any use of Jensen Precast work product without express, written consent is prohibited, and recipient is prohibited from distributing any and all work product to non-approved third parties under penalty of civil action.

DESCRIPTION:	Vault 4949 x 7 Slab Top 21"x25"E PGE Portland 39639 CASTING LAYOUT		REV: A
PART NUMBER:	400001738	DRAWN BY:	B. Evans
CREATED:	11/15/2019	MODIFIED:	4/26/2021
			SHEET: 1 OF 2

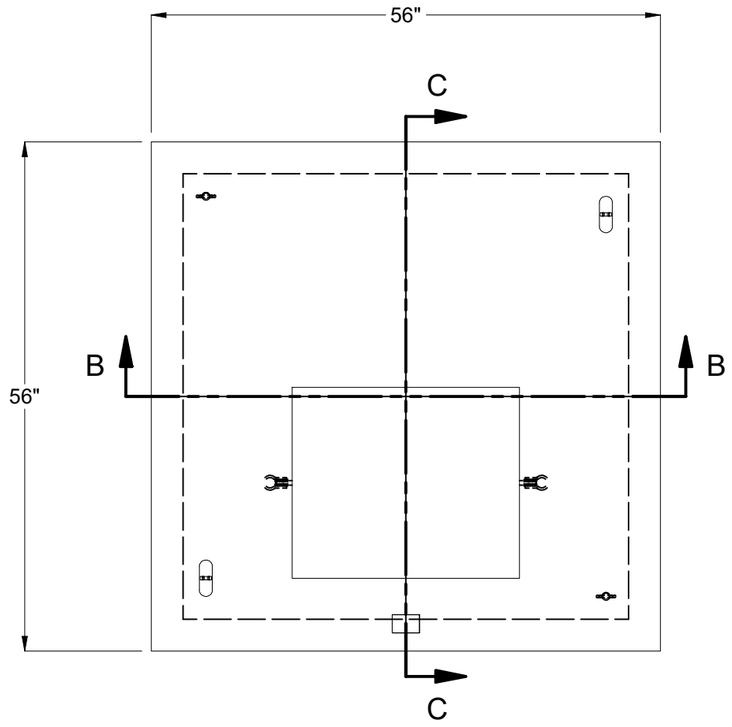

PLAN VIEW

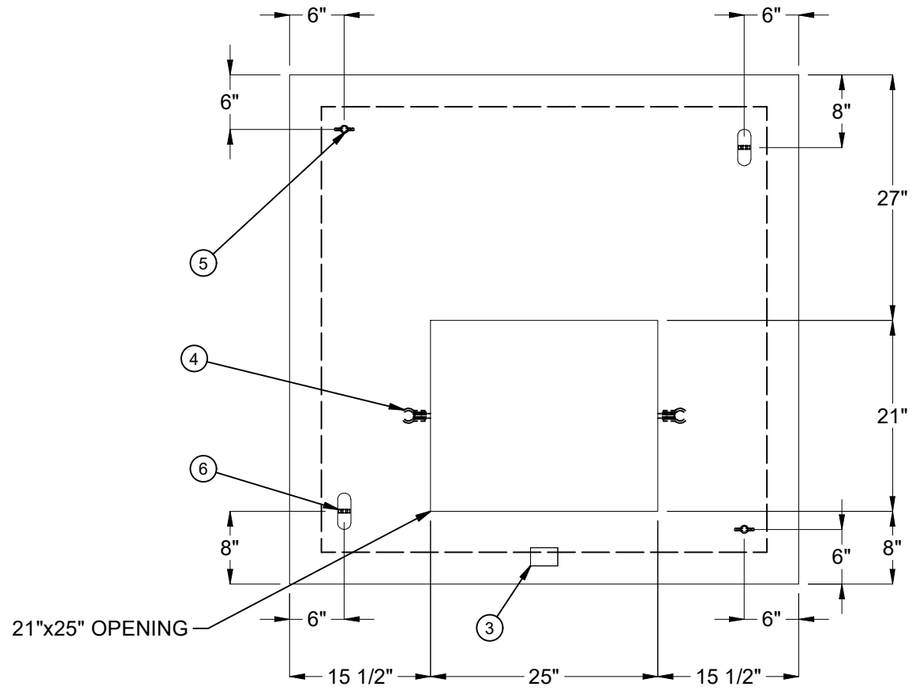

PLAN VIEW
(SHOWING OBJECT DIMENSIONS)

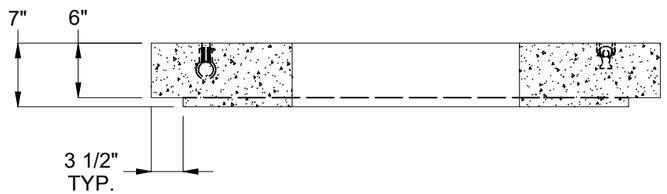

SECTION B-B
(OPPOSITE SIDE SIMILAR)

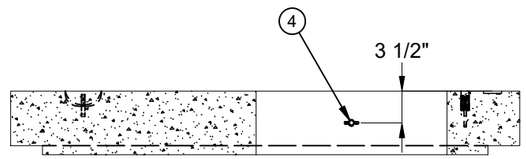

SECTION C-C
(OPPOSITE SIDE SIMILAR)

BURY DEPTH:	0.0' - 0.0' to Top		
WATER LEVEL:	Below Structure	WEIGHT:	1529.79 Lbs
DESIGN SPEC:	ASTM C857,ACI 318	LOADING SPEC:	A-16 (AASHTO HS20-44)
REINFORCEMENT TYPE:	Rebar	LIFTING TYPE:	

JENSEN PRECAST EST. 1968

WWW.JENSENPRECAST.COM

©2019 Jensen Precast- All rights reserved.
All materials appearing as Jensen Precast documents and the like are proprietary work product and are protected under U.S. copyright and other laws.
Unless in conjunction with business conducted with Jensen Precast, any use of Jensen Precast work product without express, written consent is prohibited, and recipient is prohibited from distributing any and all work product to non-approved third parties under penalty of civil action.

DESCRIPTION:	Vault 4949 x 7 Slab Top 21"x25"E PGE Portland 39639 CASTING DRAWING		REV: A
PART NUMBER:	400001738	DRAWN BY:	B. Evans
CREATED:	11/15/2019	MODIFIED:	4/26/2021
			SHEET: 2 OF 2

400001738.idw