DESIGN NOTES
■ BASE SECTION DESIGED FOR 5'-6" OF EARTH COVER
■ CONFORMS TO PGE SPECIFICATION L26100 DATED 12-11-2018
■ FOR COMPLETE DESIGN AND PRODUCT INFORMATION CONTACT JENSEN PRECAST.

BILL OF MATERIALS

ITEM	UNIT QTY	QTY	PART NUMBER	DESCRIPTION
1	1	1	400001738	Vault 4949 x 7 Slab Top 21"x25"E PGE Portland 39639
2	1	1	400000807	Vault 5050x38 Rect. Bottom Section Terminators Sump PGE Portland 39668
3	AS REQUIRED	AS REQUIRED	400001752	Riser 4444x6 Rect. Riser PGE Portland 00049
4	AS REQUIRED	AS REQUIRED	400001755	Riser 4444x12 Rect. Riser PGE Portland 39661

400001737.idw

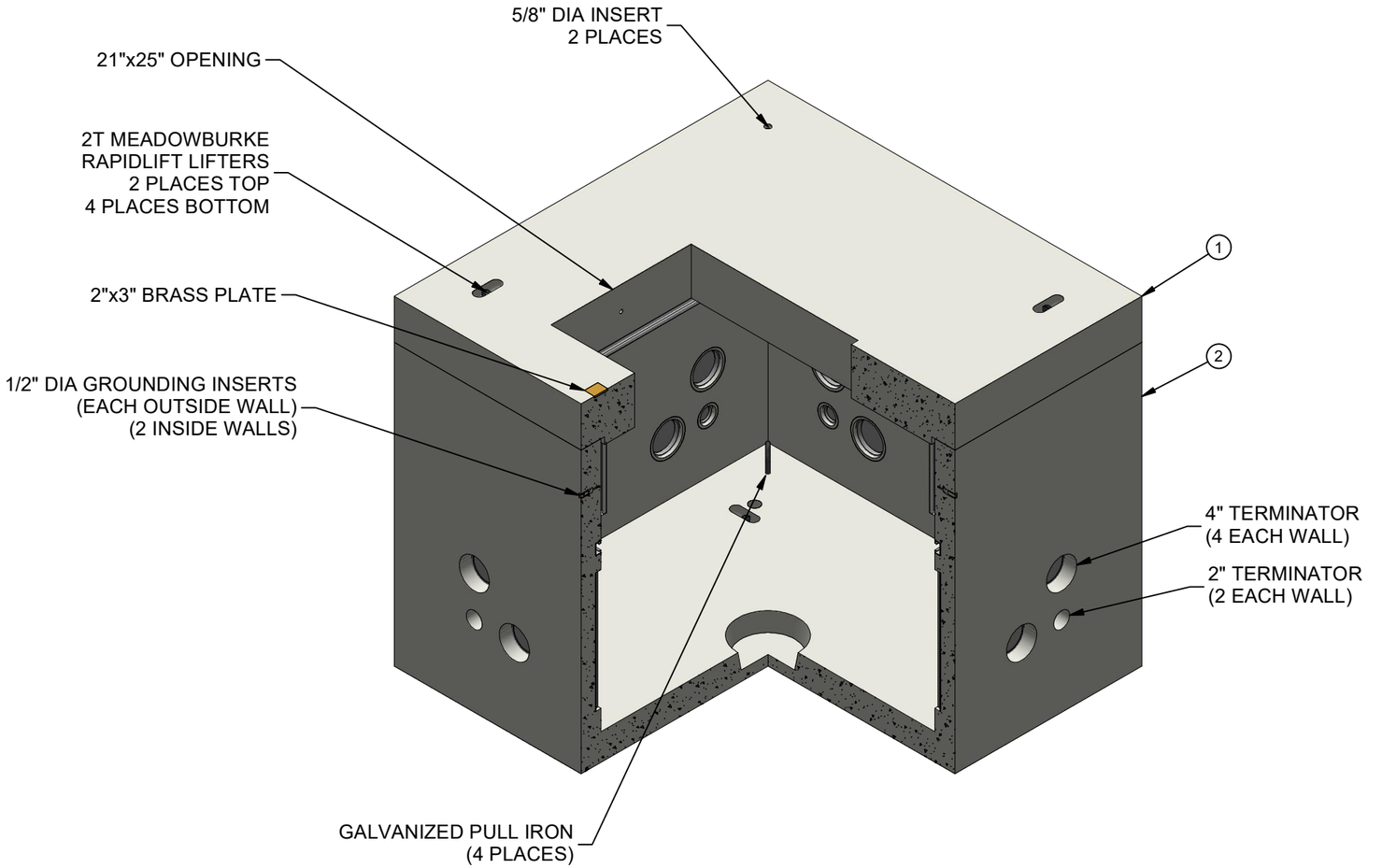

ISO LAYOUT

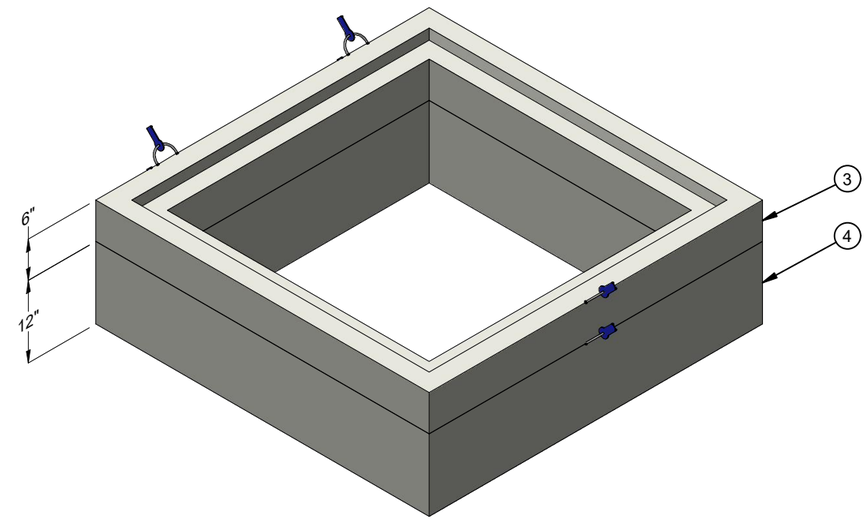

OPTIONAL RISERS

REVISION HISTORY			
REV	DESCRIPTION	DATE	BY
A	INITIAL RELEASE	11/12/2020	MBE
B	REMOVED TAPER FROM WALLS OF BOTTOM SECTION	1/27/2021	BGD

BURY DEPTH:	0.0' - 0.0' to Top		
WATER LEVEL:	5.0'	WEIGHT:	6501.91 Lbs
DESIGN SPEC:	ASTM C857,ACI 318	LOADING SPEC:	A-16 (AASHTO HS20-44)
AGENCY:	PGE Portland	AGENCY SPEC:	504-2

JENSEN PRECAST EST. 1968

WWW.JENSENPRECAST.COM

©2019 Jensen Precast- All rights reserved.
All materials appearing as Jensen Precast documents and the like are proprietary work product and are protected under U.S. copyright and other laws.
Unless in conjunction with business conducted with Jensen Precast, any use of Jensen Precast work product without express, written consent is prohibited, and recipient is prohibited from distributing any and all work product to non-approved third parties under penalty of civil action.

DESCRIPTION:	Vault 5050 Layout Assembly PGE Portland 504-2 LAYOUT REVIEW		REV: B-2
PART NUMBER:	400001737	DRAWN BY:	T.Larson
CREATED:	11/15/2019	MODIFIED:	8/8/2022
			SHEET: 1 OF 2

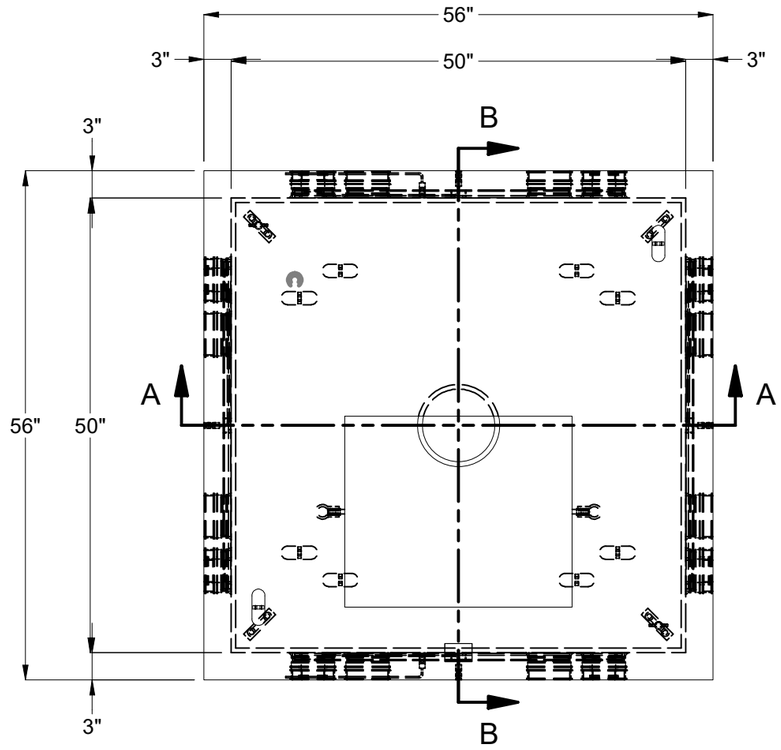

PLAN VIEW

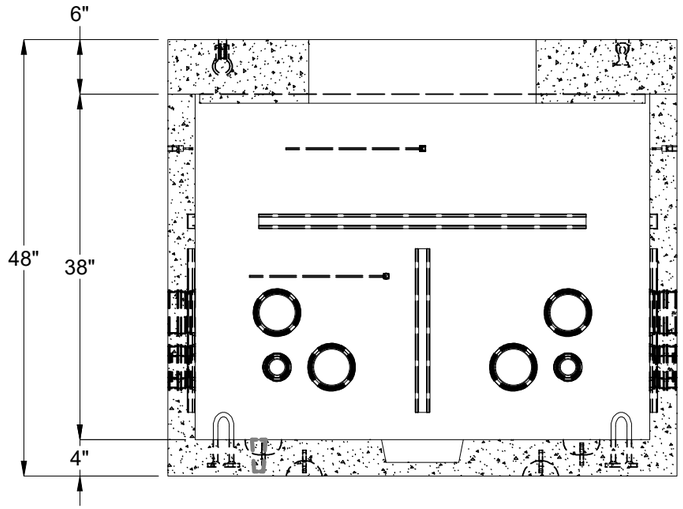

SECTION A-A

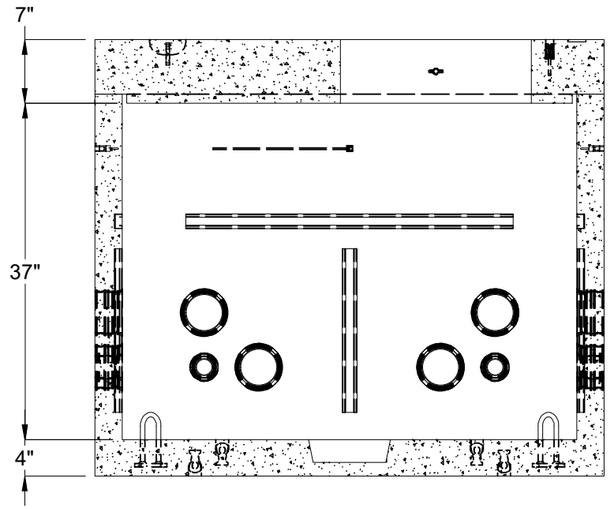

SECTION B-B

BURY DEPTH:	0.0' - 0.0' to Top		
WATER LEVEL:	5.0'	WEIGHT:	6501.91 Lbs
DESIGN SPEC:	ASTM C857,ACI 318	LOADING SPEC:	A-16 (AASHTO HS20-44)
AGENCY:	PGE Portland	AGENCY SPEC:	504-2

JENSEN PRECAST EST. 1968

WWW.JENSENPRECAST.COM

©2019 Jensen Precast- All rights reserved.
All materials appearing as Jensen Precast documents and the like are proprietary work product and are protected under U.S. copyright and other laws.
Unless in conjunction with business conducted with Jensen Precast, any use of Jensen Precast work product without express, written consent is prohibited, and recipient is prohibited from distributing any and all work product to non-approved third parties under penalty of civil action.

DESCRIPTION:	Vault 5050 Layout Assembly PGE Portland 504-2 LAYOUT REVIEW		REV: B-2
PART NUMBER:	400001737	DRAWN BY:	T.Larson
CREATED:	11/15/2019	MODIFIED:	8/8/2022
			SHEET: 2 OF 2

400001737.idw