DESIGN NOTES
■ HATCH SIDE RATED FOR H-20 TRAFFIC, CABINET SIDE RATED FOR 300 PSF
■ BASE SECTION DESIGED FOR 5'-6" OF EARTH COVER
■ CONFORMS TO PGE SPECIFICATION L26100 DATED 12-11-2018
■ FOR COMPLETE DESIGN AND PRODUCT INFORMATION CONTACT JENSEN PRECAST.

BILL OF MATERIALS

ITEM	UNIT QTY	QTY	PART NUMBER	DESCRIPTION	MASS (lbs)
1	1	1	200030471	Vault 4266x7 Slab Top 36"x36"E, 21"x25"E Cast-In Cover PGE Portland 39638	1688.69
2	1	1	400001438	Vault 4266x38 Rect. Bottom Section Terminators Sump PGE Portland 39664	3380.21
3	AS REQUIRED	AS REQUIRED	400001640	Riser 4266x6 PGE Portland 00050	668.74
4	AS REQUIRED	AS REQUIRED	400001649	Riser 4266x12 PGE Portland 39658	1345.02

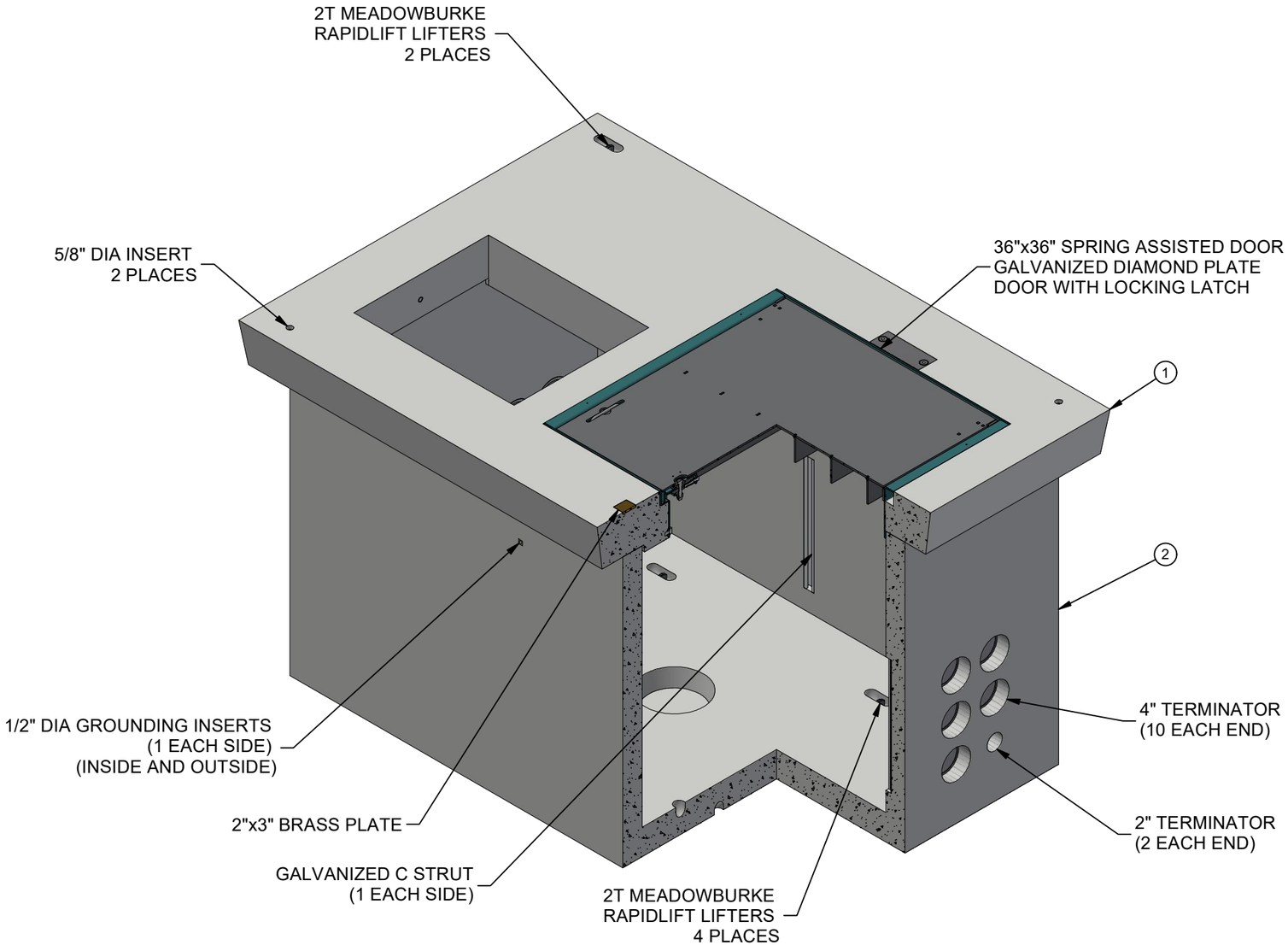

ISO LAYOUT

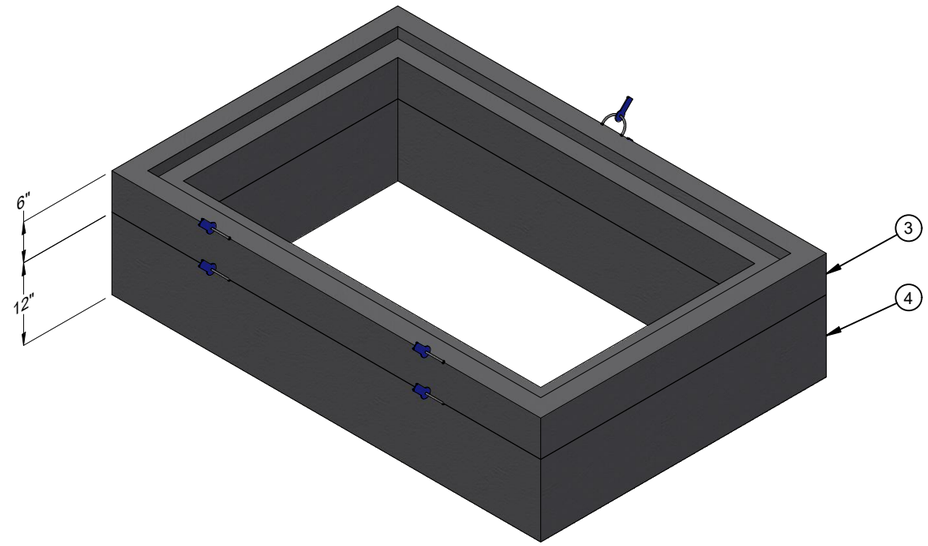

OPTIONAL RISERS

REVISION HISTORY			
REV	DESCRIPTION	DATE	BY
A	INITIAL RELEASE	7/29/2020	MBE
B	HATCH AND BOTTOM SECTION UPDATED	8/5/2022	T.Larson
C	TOP SLAB BOM UPDATE	3/16/2023	DCH

BURY DEPTH:	0.0' - 0.0' to Top		
WATER LEVEL:	5.0'	WEIGHT:	7047.24 Lbs
DESIGN SPEC:	ASTM C857,ACI 318	LOADING SPEC:	A-16 (AASHTO HS20-44)
AGENCY:	PGE Portland	AGENCY SPEC:	644-4

JENSEN PRECAST EST. 1968

WWW.JENSENPRECAST.COM

©2019 Jensen Precast- All rights reserved.
All materials appearing as Jensen Precast documents and the like are proprietary work product and are protected under U.S. copyright and other laws.
Unless in conjunction with business conducted with Jensen Precast, any use of Jensen Precast work product without express, written consent is prohibited, and recipient is prohibited from distributing any and all work product to non-approved third parties under penalty of civil action.

DESCRIPTION:	Vault 4266 Layout Assembly PGE Portland 644-4 LAYOUT REVIEW		REV: C-1
PART NUMBER:	400001651	DRAWN BY:	D. Hughes
CREATED:	10/10/2019	MODIFIED:	3/16/2023
			SHEET: 1 OF 2

400001651.idw

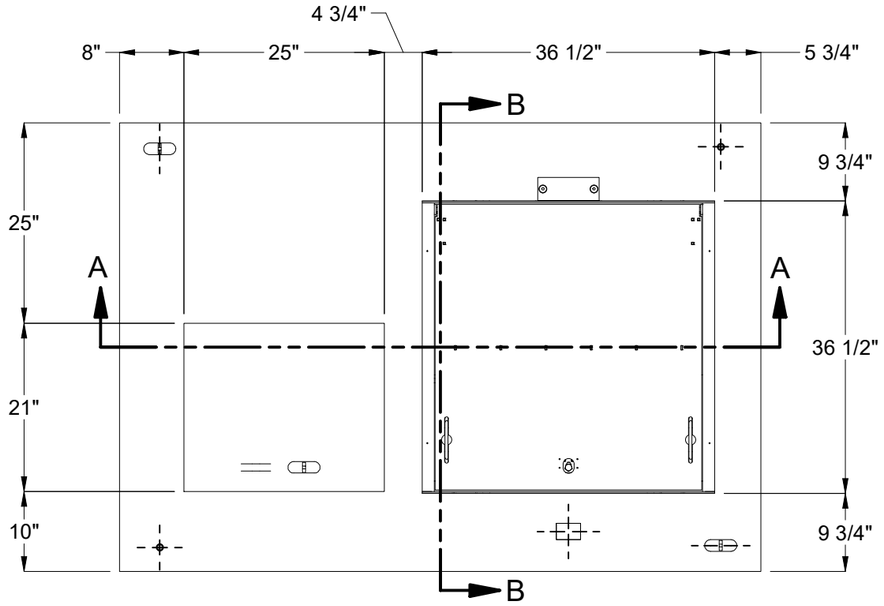

PLAN VIEW

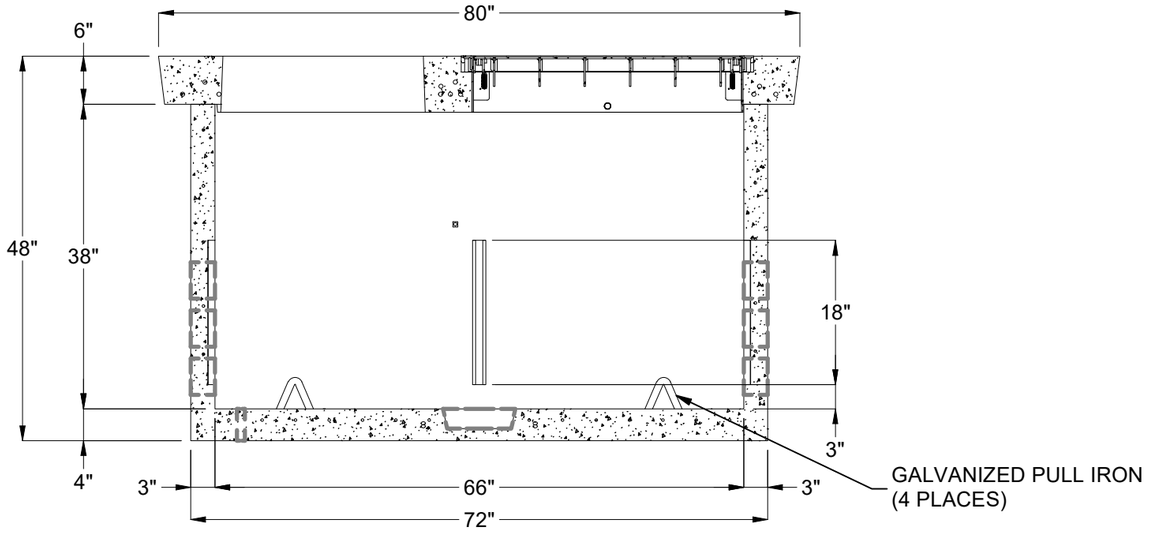

SECTION A-A

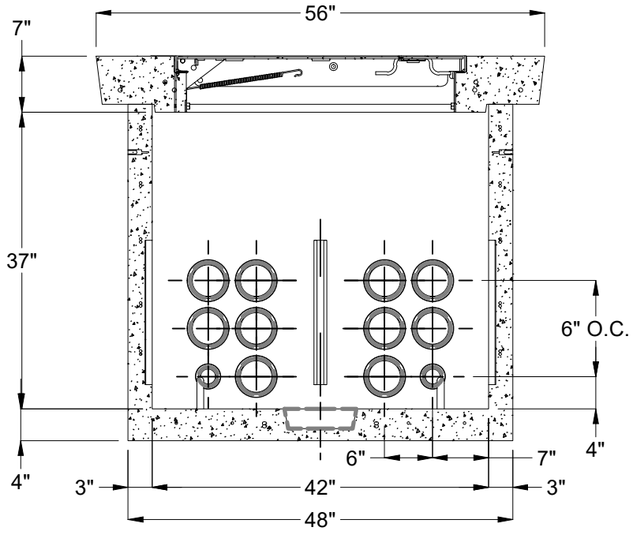

SECTION B-B

BURY DEPTH:	0.0' - 0.0' to Top		
WATER LEVEL:	5.0'	WEIGHT:	7047.24 Lbs
DESIGN SPEC:	ASTM C857,ACI 318	LOADING SPEC:	A-16 (AASHTO HS20-44)
AGENCY:	PGE Portland	AGENCY SPEC:	644-4

JENSEN PRECAST EST. 1968

WWW.JENSENPRECAST.COM

©2019 Jensen Precast- All rights reserved.
All materials appearing as Jensen Precast documents and the like are proprietary work product and are protected under U.S. copyright and other laws.
Unless in conjunction with business conducted with Jensen Precast, any use of Jensen Precast work product without express, written consent is prohibited, and recipient is prohibited from distributing any and all work product to non-approved third parties under penalty of civil action.

DESCRIPTION:	Vault 4266 Layout Assembly PGE Portland 644-4 LAYOUT REVIEW		REV: C-1
PART NUMBER:	400001651	DRAWN BY:	D. Hughes
CREATED:	10/10/2019	MODIFIED:	3/16/2023
			SHEET: 2 OF 2

400001651.idw