DESIGN NOTES
■ CONFORMS TO PGE SPECIFICATION L26100 DATED 12-11-2018
■ FOR COMPLETE DESIGN AND PRODUCT INFORMATION CONTACT JENSEN PRECAST

BILL OF MATERIALS

ITEM	UNIT QTY	QTY	PART NUMBER	DESCRIPTION
1	8.941 ft^3	8.941 ft^3	100011425	CONCRETE MIX 5000 PSI
2	1	3	100002949	ANCHOR CABLE LOOP LIFT 1/4 x 8-1/4 CLPS2K MB - White Tag
3	1	1	400001650	REINFORCING MAT 400001650

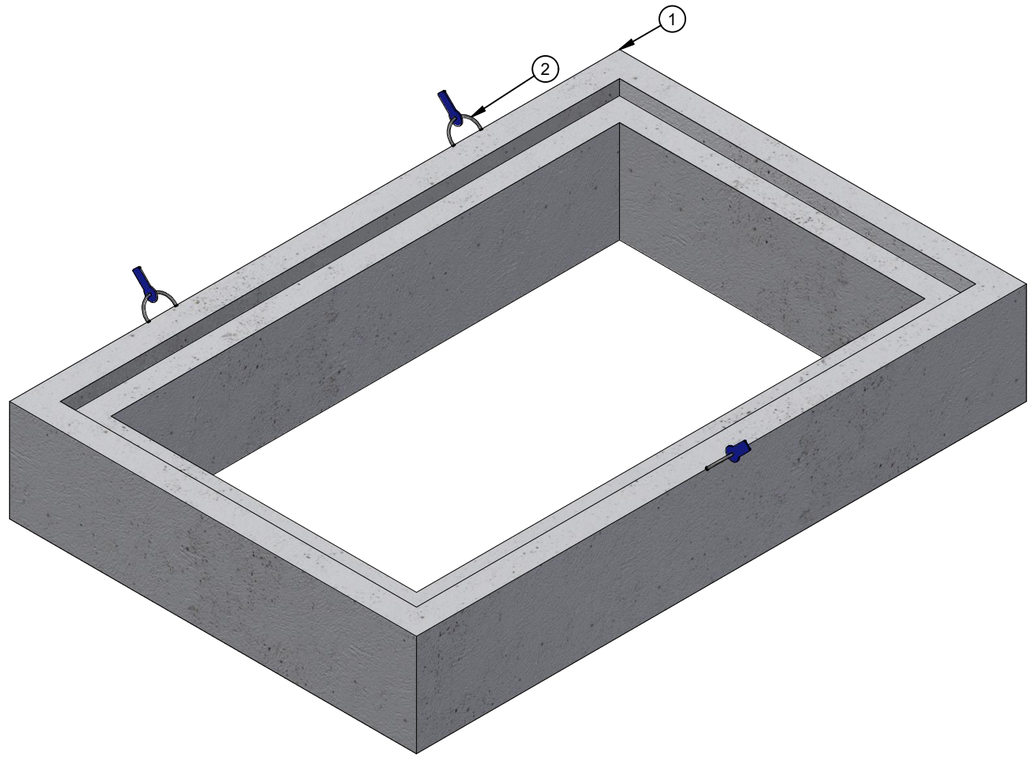

ISO VIEW

400001649.idw

LIFTING NOTES
■ THIS CONCRETE PRODUCT IS DESIGNED TO BE LIFTED AT 2500 PSI WITH 3 LIFT CONNECTIONS EQUALLY LOADED TO 3 LIFTING POINTS AT A MINIMUM 60° SLING ANGLE, MEASURED FROM HORIZONTAL.
*All rigging shall be design by a qualified professional. Loading diagrams show illustrations of possible rigging setups to achieve the required sling angle and load leg equalization. Other valid rigging configurations are possible. A qualified professional must be consulted prior to lifting.

RIGGING DIAGRAM*	A
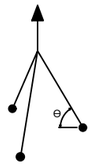	

CHANGE HISTORY			
NO.	DESCRIPTION	DATE	BY
1	INITIAL RELEASE	7/29/2020	MBE
2	UPDATED LIFTERS TO CABLE LOOPS	11/14/22	MGL
3	UPDATED CONCRETE TEXTURE	5/19/2026	AMV

BURY DEPTH:	0.0' - 4.5' to Top		
WATER LEVEL:	5.0'	APPROX. WEIGHT:	1345.02 Lbs
DESIGN SPEC:	ACI 318,ASTM C857	LOADING SPEC:	A-16 (AASHTO HS20-44)
REINFORCEMENT TYPE:	Rebar	LIFTING TYPE:	Cable

Infrastructure
JENSEN
WWW.JENSENINFRASTRUCTURE.COM

©2026 Jensen Infrastructure - All rights reserved.
All materials appearing as Jensen Infrastructure documents and the like are proprietary work product and are protected under U.S. copyright and other laws.
Unless in conjunction with business conducted with Jensen Infrastructure , any use of Jensen Infrastructure work product without express, written consent is prohibited, and recipient is prohibited from distributing any and all work product to non-approved third parties under penalty of civil action.
This product shall only be produced in a Jensen Infrastructure facility.

DESCRIPTION:	Riser 4266x12 PGE Portland 39658 CASTING LAYOUT			REV: B-3
PART NUMBER:	400001649	DRAWN BY:	M. Lincoln	SHEET: 1 OF 2
CREATED:	10/29/2019	MODIFIED:	5/20/2026	

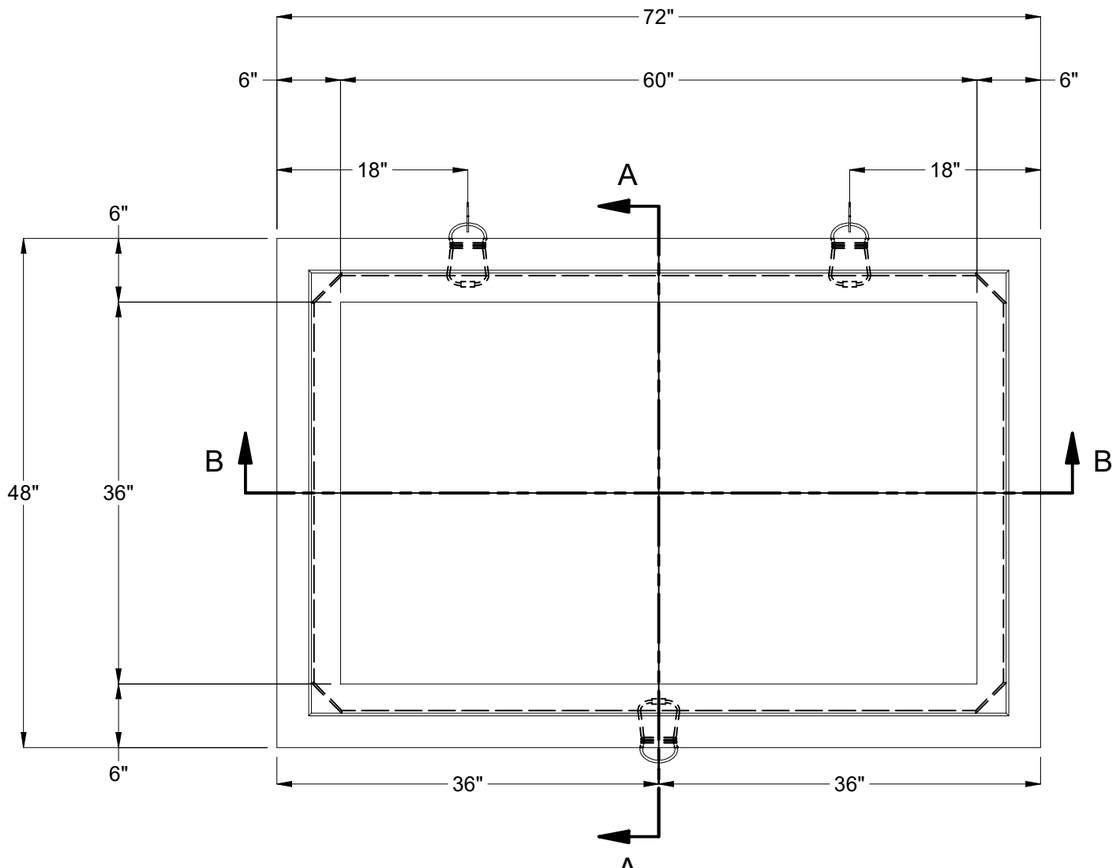

PLAN VIEW

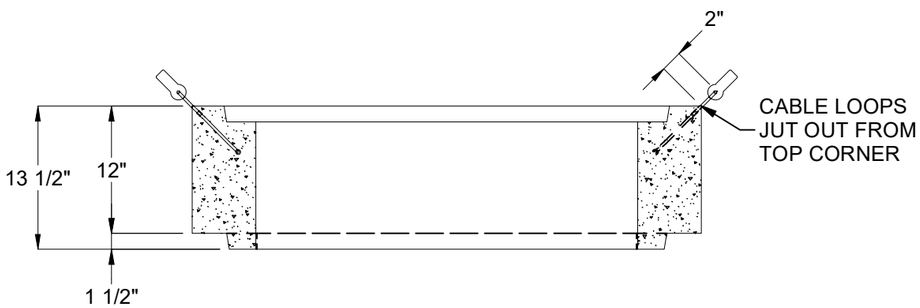

SECTION A-A

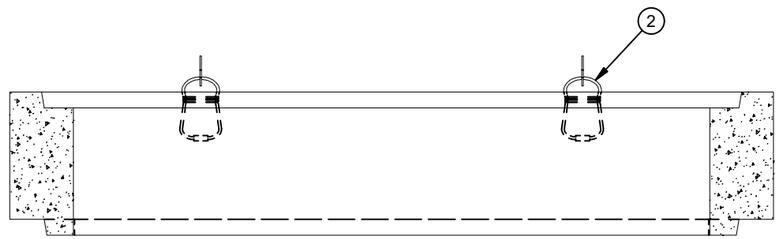

SECTION B-B

BURY DEPTH:	0.0' - 4.5' to Top		
WATER LEVEL:	5.0'	APPROX. WEIGHT:	1345.02 Lbs
DESIGN SPEC:	ACI 318,ASTM C857	LOADING SPEC:	A-16 (AASHTO HS20-44)
REINFORCEMENT TYPE:	Rebar	LIFTING TYPE:	Cable

Infrastructure
JENSEN
WWW.JENSENINFRASTRUCTURE.COM

©2026 Jensen Infrastructure - All rights reserved.
All materials appearing as Jensen Infrastructure documents and the like are proprietary work product and are protected under U.S. copyright and other laws.
Unless in conjunction with business conducted with Jensen Infrastructure , any use of Jensen Infrastructure work product without express, written consent is prohibited, and recipient is prohibited from distributing any and all work product to non-approved third parties under penalty of civil action.
This product shall only be produced in a Jensen Infrastructure facility.

DESCRIPTION:	Riser 4266x12 PGE Portland 39658 CASTING DRAWING		REV: B-3
PART NUMBER:	400001649	DRAWN BY:	M. Lincoln
CREATED:	10/29/2019	MODIFIED:	5/20/2026
			SHEET: 2 OF 2

400001649.idw