DESIGN NOTES
■ CONFORMS TO PGE SPECIFICATION L26100 DATED 12-11-2018
■ FOR COMPLETE DESIGN AND PRODUCT INFORMATION CONTACT JENSEN PRECAST.

BILL OF MATERIALS

ITEM	UNIT QTY	QTY	PART NUMBER	DESCRIPTION
1	22.516 ft^3	22.516 ft^3	100011425	CONCRETE MIX 5000 PSI
2	1	4	100014034	TERMINATOR DUCT WITH SEAL 2IN SHORT T2000
3	1	20	100003011	TERMINATOR DUCT WITH SEAL 3IN SHORT T3000
4	1	4	100005933	GROUND INSERTS BOTTLE ROCKET BRASS 1/2X16 STEEL ROD 12G69
5	1	4	100003026	PULL IRON OFFSET .875DIA 6H X 5W X 10.875L GALV
6	1	8	100034833	ANCHOR RAPID LIFT TECH 2.5T CLUTCH 2.4375IN LONG MB RL-25
7	18.0000 in	72.0000 in	100022114	STRUT C-CHANNEL 13/16 X 1-5/8 16GA SOLID GALV SHALLOW W-400/P4000
8	1	1	400001439	REINFORCING MAT 400001439

400001379.idw

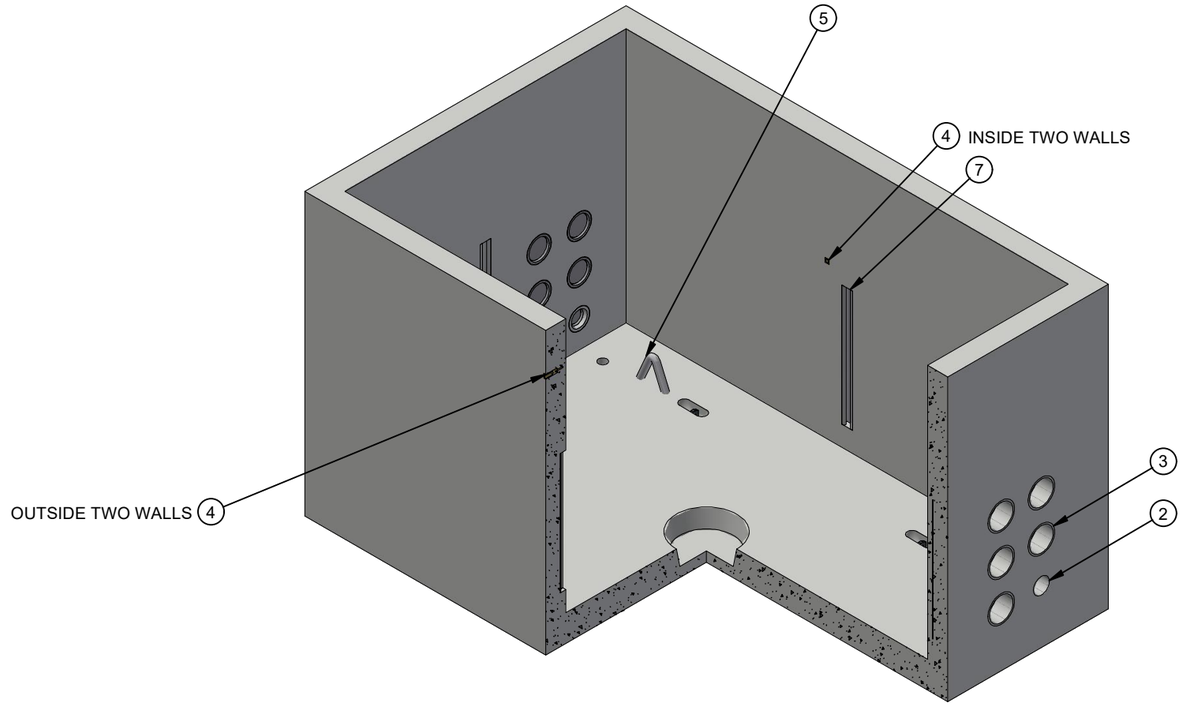

ISO LAYOUT

LIFTING NOTES
■ PLANT DEMOLDING & FIELD INSTALLATION: MINIMUM HANDLING CONCRETE STRENGTH F'c = 3500 PSI RIGGING EQUALIZER REQUIRED TO EQUALIZE LOAD TO 2 LIFTING POINTS WITH A SLING ANGLE BETWEEN 60° AND 90°

REVISION HISTORY			
REV	DESCRIPTION	DATE	BY
A	INITIAL RELEASE	7/15/2020	MBE
B	MINOR LIFTING UPDATE	7/29/2020	MBE
C	LIFTING AND UNISTRUT UPDATED	8/5/2022	T.Larson
C-1	ADDED WELD DETAILS	11/06/2024	EBH

BURY DEPTH:	0.5' - 5.5' to Top		
WATER LEVEL:	5.0'	WEIGHT:	3413.97 Lbs
DESIGN SPEC:	ASTM C857,ACI 318	LOADING SPEC:	A-16 (AASHTO HS20-44)
REINFORCEMENT TYPE:	Rebar	LIFTING TYPE:	Tech Erection Anchor

JENSEN PRECAST EST. 1968

WWW.JENSENPRECAST.COM

©2019 Jensen Precast- All rights reserved.
All materials appearing as Jensen Precast documents and the like are proprietary work product and are protected under U.S. copyright and other laws.
Unless in conjunction with business conducted with Jensen Precast, any use of Jensen Precast work product without express, written consent is prohibited, and recipient is prohibited from distributing any and all work product to non-approved third parties under penalty of civil action.

DESCRIPTION:	Vault 4266x38 Rect. Bottom Section Terminators Sump PGE Portland 39663 CASTING LAYOUT		REV: C-1
PART NUMBER:	400001379	DRAWN BY:	E.Herrera
CREATED:	9/27/2019	MODIFIED:	11/6/2024
			SHEET: 1 OF 2

FEATURES		
ID	DESCRIPTION	QTY
A	Ø8" Sump	1
B	Ø1" x 3 1/2" Deep Knockout	1

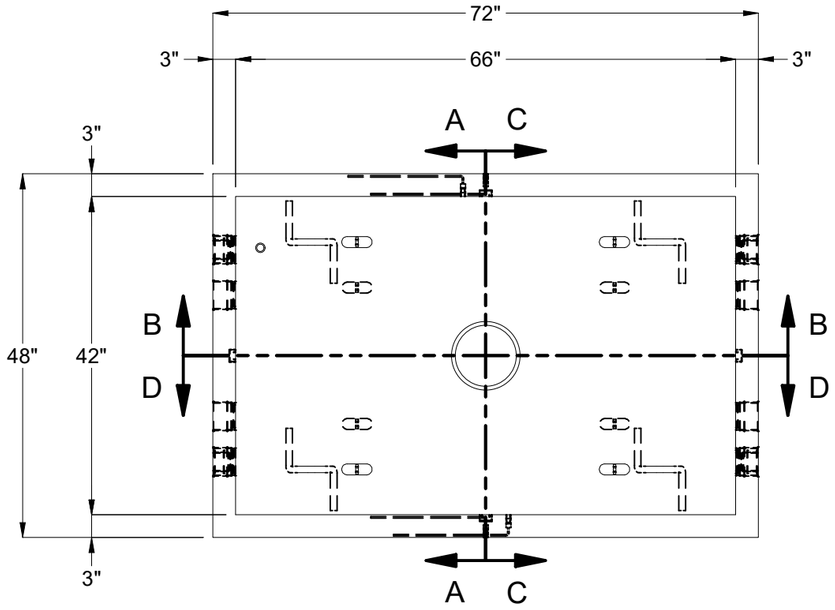

PLAN VIEW

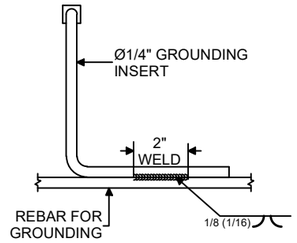

CONNECTION DETAIL
SINGLE WELD

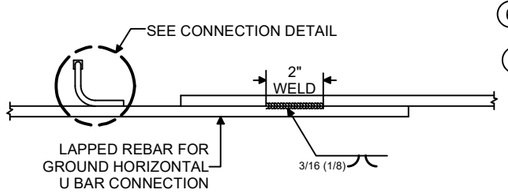

DETAIL 1
HORIZONTAL U BAR WELD

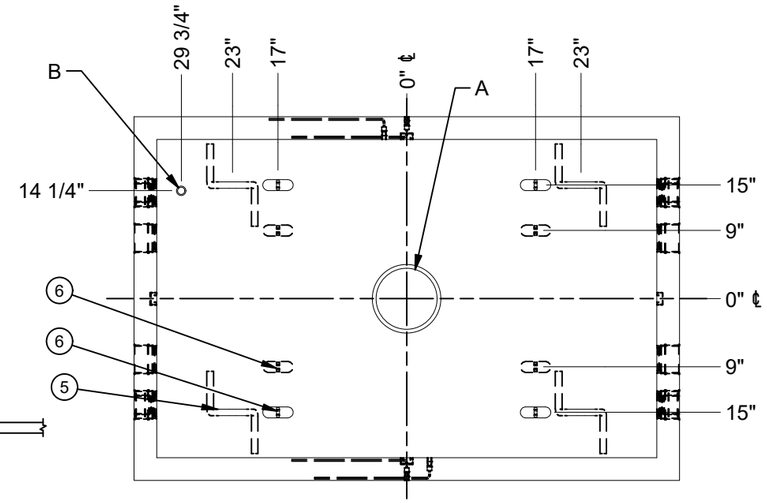

PLAN VIEW
(SHOWING OBJECT DIMENSIONS)

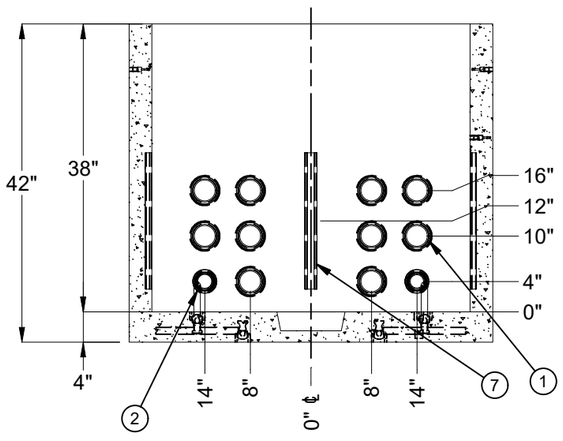

SECTION A-A

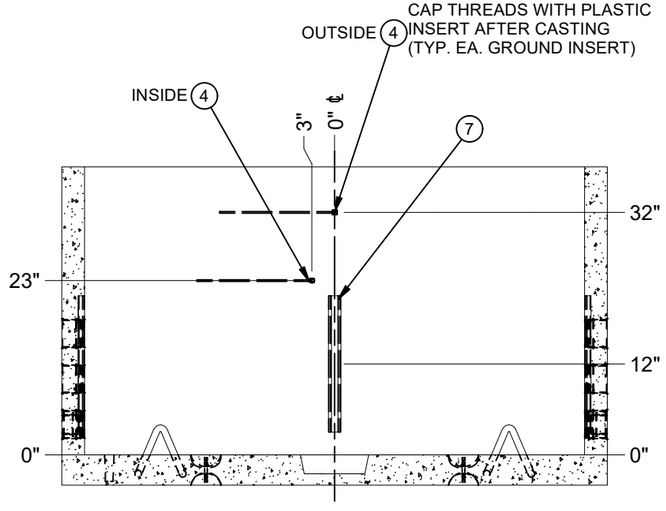

SECTION B-B

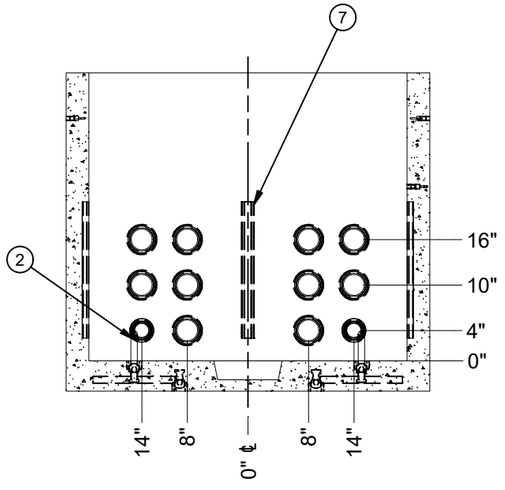

SECTION C-C

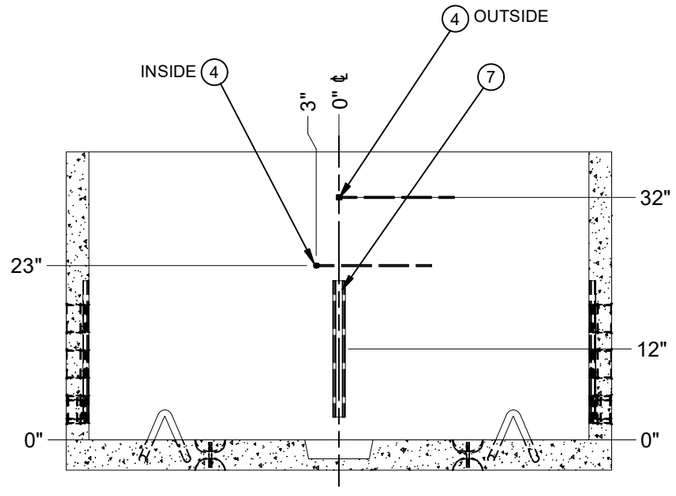

SECTION D-D

BURY DEPTH:	0.5' - 5.5' to Top		
WATER LEVEL:	5.0'	WEIGHT:	3413.97 Lbs
DESIGN SPEC:	ASTM C857,ACI 318	LOADING SPEC:	A-16 (AASHTO HS20-44)
REINFORCEMENT TYPE:	Rebar	LIFTING TYPE:	Tech Erection Anchor

JENSEN PRECAST EST. 1968

WWW.JENSENPRECAST.COM

©2019 Jensen Precast- All rights reserved.
All materials appearing as Jensen Precast documents and the like are proprietary work product and are protected under U.S. copyright and other laws.
Unless in conjunction with business conducted with Jensen Precast, any use of Jensen Precast work product without express, written consent is prohibited, and recipient is prohibited from distributing any and all work product to non-approved third parties under penalty of civil action.

DESCRIPTION:	Vault 4266x38 Rect. Bottom Section Terminators Sump PGE Portland 39663 CASTING DRAWING		REV: C-1
PART NUMBER:	400001379	DRAWN BY:	E.Herrera
CREATED:	9/27/2019	MODIFIED:	11/6/2024
			SHEET: 2 OF 2

400001379.idw