DESIGN NOTES
■ CONFORMS TO PGE SPECIFICATION L26100 DATED 12-11-2018
■ FOR COMPLETE DESIGN AND PRODUCT INFORMATION CONTACT JENSEN PRECAST.

BILL OF MATERIALS

ITEM	UNIT QTY	QTY	PART NUMBER	DESCRIPTION
1	6.836 ft^3	6.836 ft^3	100011425	CONCRETE MIX 5000 PSI
2	1	2	100002765	Insert Ferrule Loop 0.5 x 2.75" Zinc (F42 or Equiv.)
3	1	2	100002766	INSERT FERRULE LOOP 5/8 X 3-1/2 PLATED FX-5
4	1	2	100034833	ANCHOR RAPID LIFT TECH 2.5T CLUTCH 2.4375IN LONG MB RL-25
5	1	1	100031278	PLATE 2x3 BRASS
6	1	1	400000812	REINFORCING MAT 400000812

400000811.idw

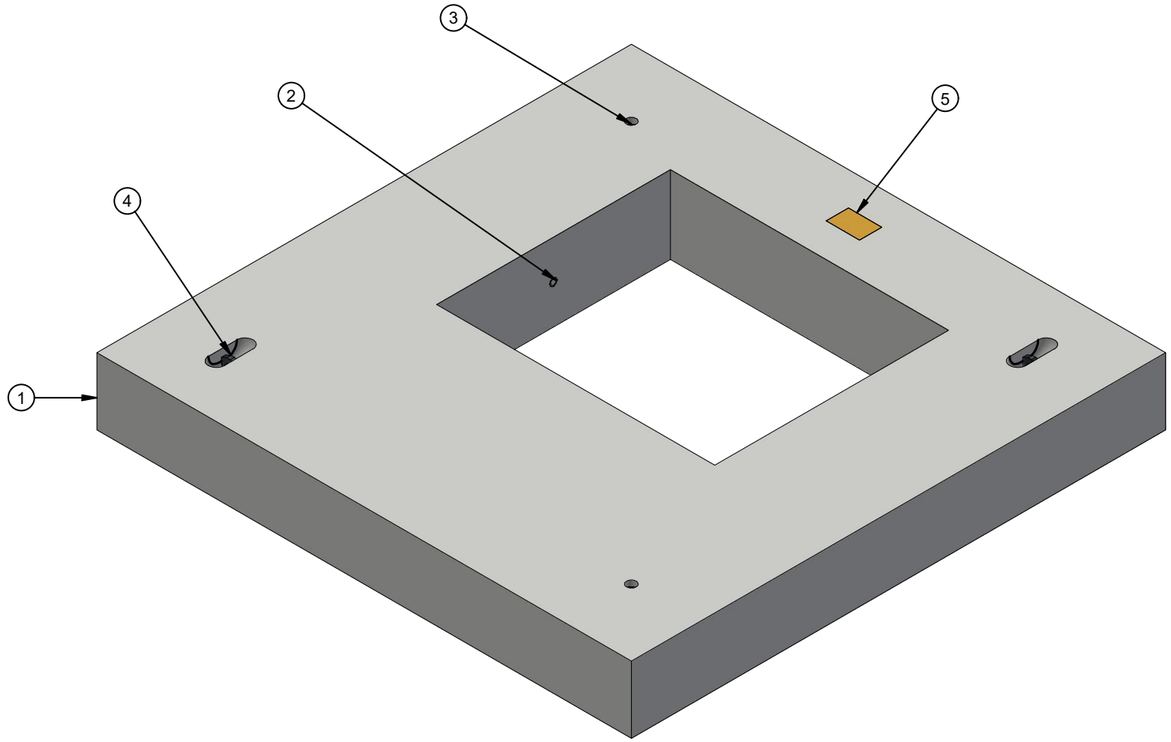

ISO LAYOUT

LIFTING NOTES
■ PLANT DEMOLDING AND FIELD INSTALLATION: MINIMUM HANDLING CONCRETE STRENGTH F'c = 2500 PSI RIGGING EQUALIZER REQUIRED TO EQUALIZE LOAD TO 2 LIFTING POINTS WITH A 60° SLING ANGLE.

REVISION HISTORY			
REV	DESCRIPTION	DATE	BY
A	INITIAL RELEASE	11/12/2019	BTW
A-4	ADDED DIMENSION	12/6/2022	DCH

BURY DEPTH:	0.0' - 0.0' to Top		
WATER LEVEL:	Below Structure	WEIGHT:	1033.03 Lbs
DESIGN SPEC:	ASTM C857,ACI 318	LOADING SPEC:	A-16 (AASHTO HS20-44)
REINFORCEMENT TYPE:	Rebar	LIFTING TYPE:	Tech Erection Anchor

JENSEN PRECAST EST. 1968

WWW.JENSENPRECAST.COM

©2019 Jensen Precast- All rights reserved.
All materials appearing as Jensen Precast documents and the like are proprietary work product and are protected under U.S. copyright and other laws.
Unless in conjunction with business conducted with Jensen Precast, any use of Jensen Precast work product without express, written consent is prohibited, and recipient is prohibited from distributing any and all work product to non-approved third parties under penalty of civil action.

DESCRIPTION:	Vault 4242 x 7 Slab Top 2125"E PGE Portland 39662 CASTING LAYOUT		REV: A-3
PART NUMBER:	400000811	DRAWN BY:	E. Fine
CREATED:	10/28/2019	MODIFIED:	12/6/2022
			SHEET: 1 OF 2

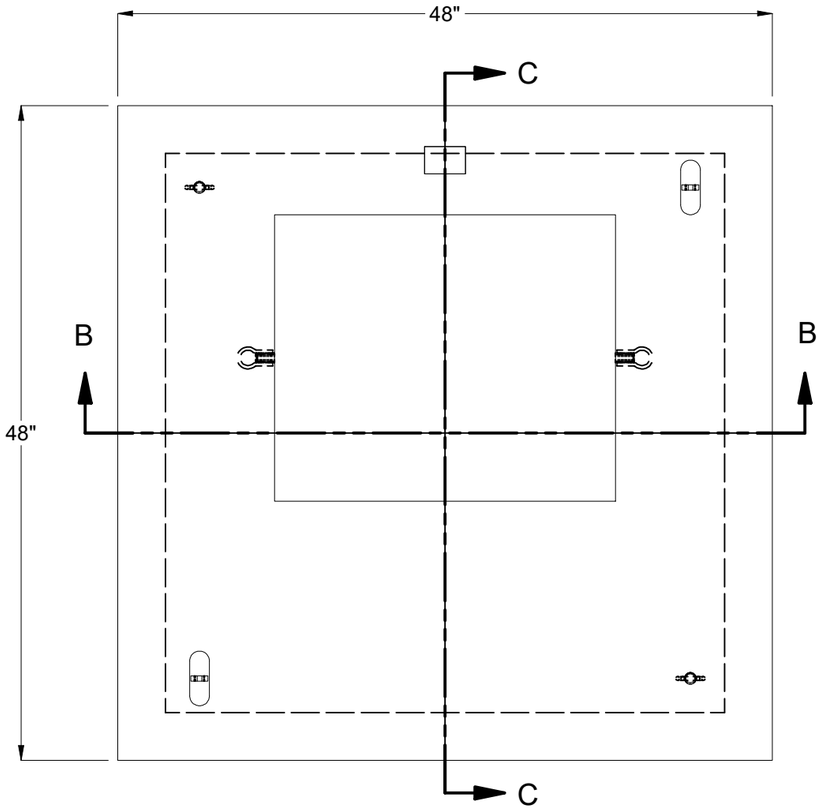

PLAN VIEW

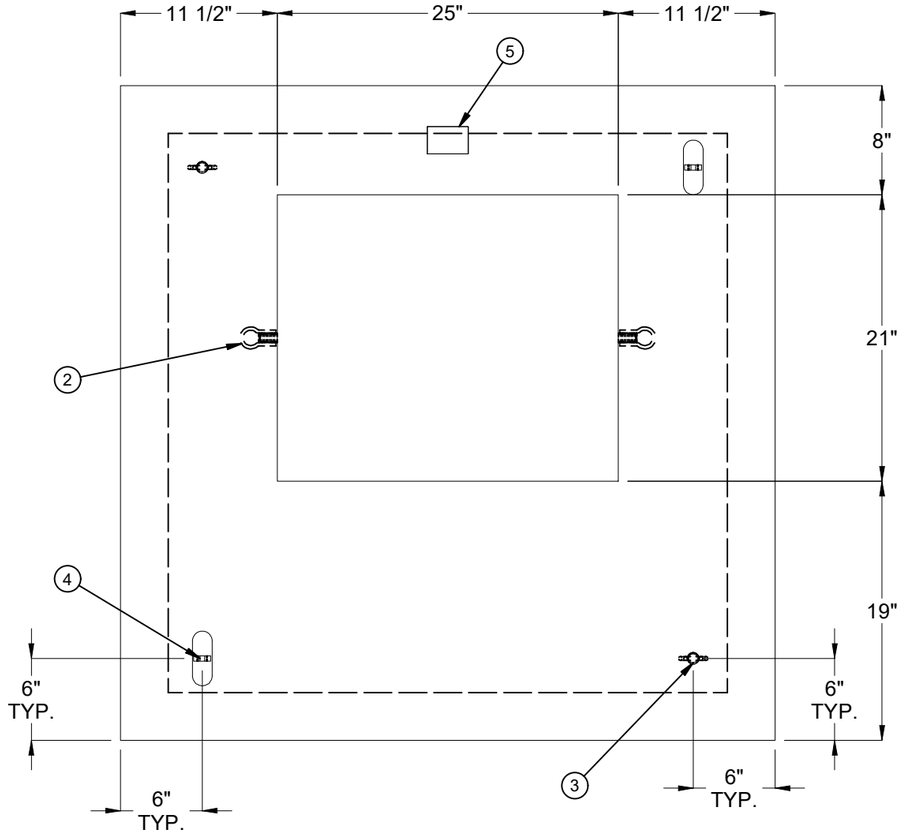

PLAN VIEW
(SHOWING OBJECT DIMENSIONS)

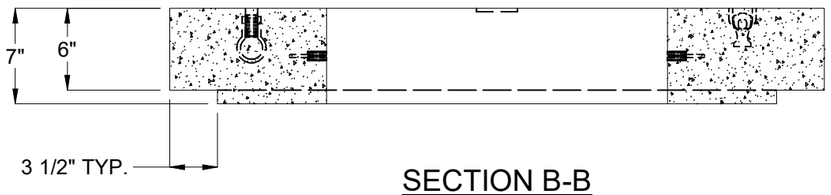

SECTION B-B
(OPPOSITE SIDE SIMILAR)

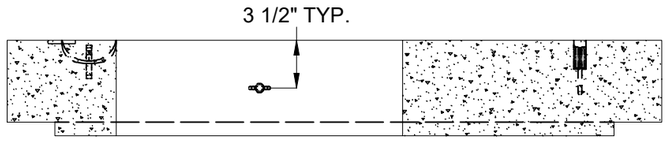

SECTION C-C
(OPPOSITE SIDE SIMILAR)

BURY DEPTH:	0.0' - 0.0' to Top		
WATER LEVEL:	Below Structure	WEIGHT:	1033.03 Lbs
DESIGN SPEC:	ASTM C857,ACI 318	LOADING SPEC:	A-16 (AASHTO HS20-44)
REINFORCEMENT TYPE:	Rebar	LIFTING TYPE:	Tech Erection Anchor

JENSEN PRECAST EST. 1968

WWW.JENSENPRECAST.COM

©2019 Jensen Precast- All rights reserved.
All materials appearing as Jensen Precast documents and the like are proprietary work product and are protected under U.S. copyright and other laws.
Unless in conjunction with business conducted with Jensen Precast, any use of Jensen Precast work product without express, written consent is prohibited, and recipient is prohibited from distributing any and all work product to non-approved third parties under penalty of civil action.

DESCRIPTION:	Vault 4242 x 7 Slab Top 2125"E PGE Portland 39662 CASTING DRAWING		REV: A-3
PART NUMBER:	400000811	DRAWN BY:	E. Fine
CREATED:	10/28/2019	MODIFIED:	12/6/2022

SHEET: 2 OF 2

400000811.idw