DESIGN NOTES
■ BASE SECTION DESIGED FOR 5'-6" OF EARTH COVER
■ CONFORMS TO PGE SPECIFICATION L26100 DATED 12-11-2018
■ FOR COMPLETE DESIGN AND PRODUCT INFORMATION CONTACT JENSEN PRECAST.

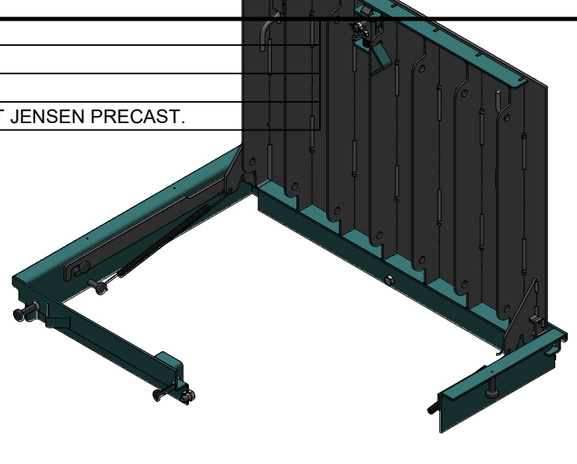

BILL OF MATERIALS

ITEM	UNIT QTY	QTY	PART NUMBER	DESCRIPTION
1	1	1	400000799	Vault 2436x6 Slab Top 2436"C Cast-In Cover PGE Portland 39626
2	1	1	400000800	Vault 2436x32 Rect. Bottom Section Terminators Sump PGE Portland 39665
3	AS REQUIRED	AS REQUIRED	400001784	Pull Box 2436x6 Rect. Riser
4	AS REQUIRED	AS REQUIRED	400001786	Pull Box 2436x12 Rect. Riser

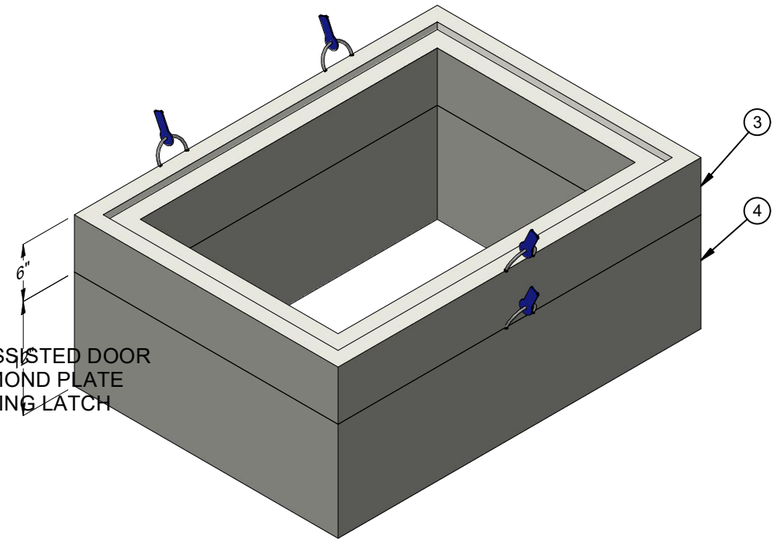

OPTIONAL RISERS

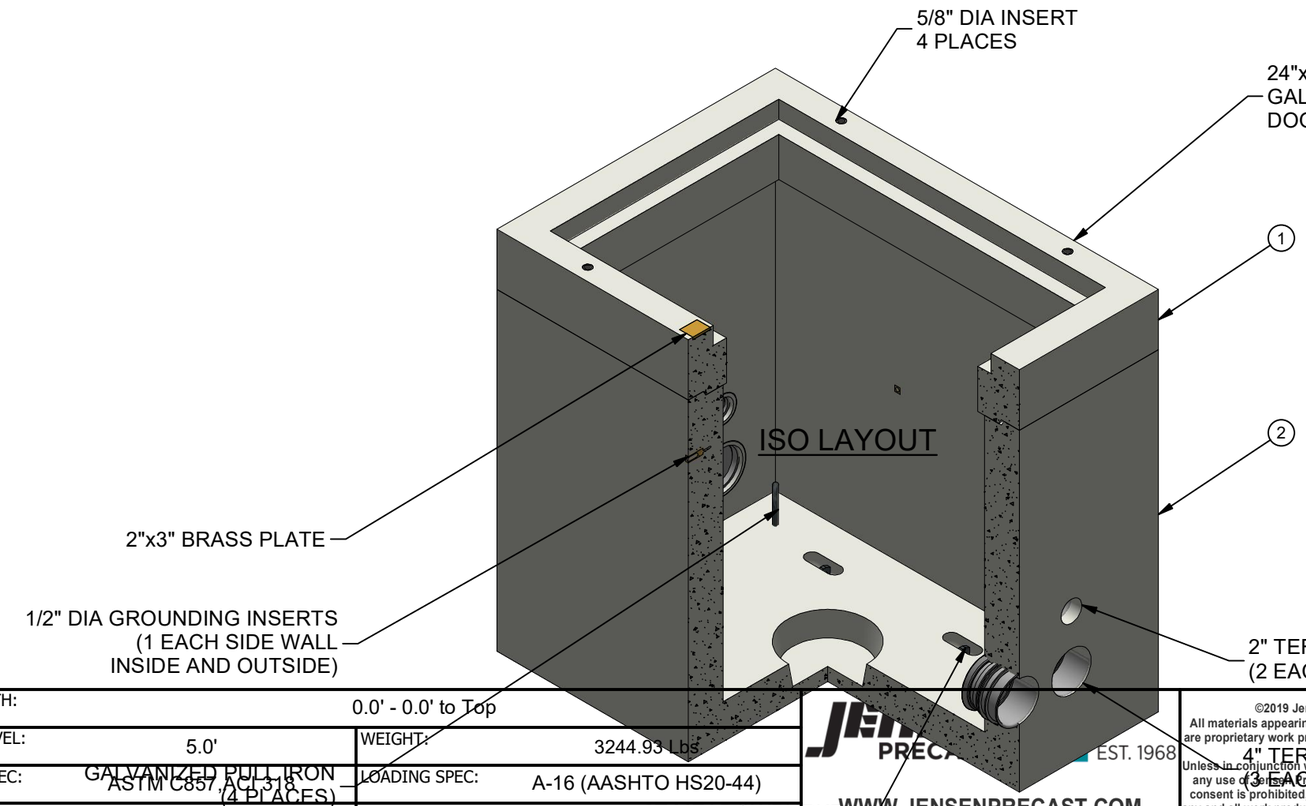

ISO LAYOUT

REVISION HISTORY			
REV	DESCRIPTION	DATE	BY
A	INITIAL RELEASE	11/12/2020	MBE
B	TOP SLAB AND BASE SECTION UPDATED	8/18/2022	E.FINE

BURY DEPTH:	0.0' - 0.0' to Top		
WATER LEVEL:	5.0'	WEIGHT:	3244.93 Lbs
DESIGN SPEC:	ASTM C857 ACI 318	LOADING SPEC:	A-16 (AASHTO HS20-44)
AGENCY:	PGE Portland	AGENCY SPEC:	233

JENSEN PRECAST EST. 1968
WWW.JENSENPRECAST.COM

©2019 Jensen Precast- All rights reserved.
All materials appearing as Jensen Precast documents and the like are proprietary work product and are protected under U.S. copyright laws.
Unless in conjunction with business conducted with Jensen Precast, any use of these documents or product without express, written consent is prohibited, and recipient is prohibited from distributing any and all work product to non-approved third parties under penalty of civil action.

DESCRIPTION:	Utility Vault 2436 Layout Assembly PGE Portland 233 LAYOUT REVIEW		REV: B-7
PART NUMBER:	400000798	DRAWN BY:	E. Fine
CREATED:	10/28/2019	MODIFIED:	12/6/2022
			SHEET: 1 OF 2

400000798.idw

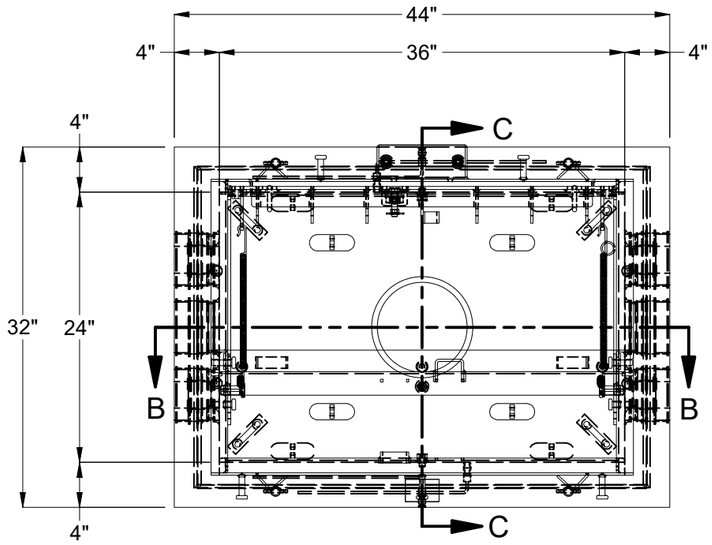

PLAN VIEW

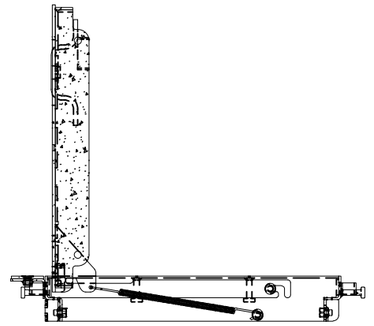

SECTION C-C

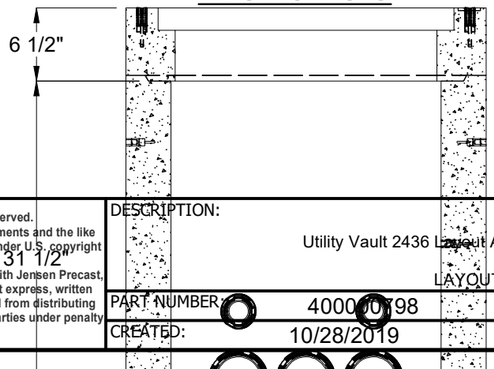

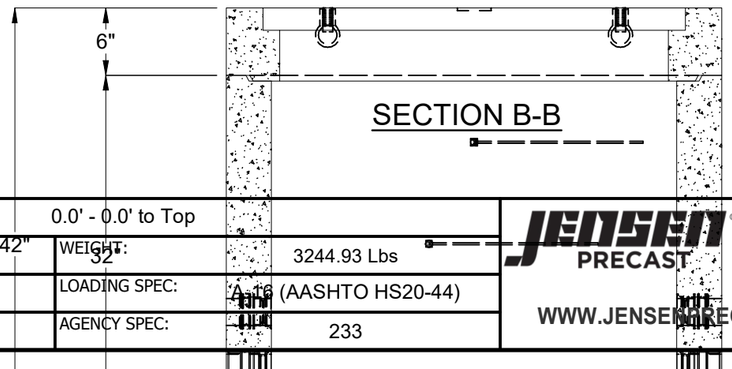

SECTION B-B

BURY DEPTH:	0.0' - 0.0' to Top		
WATER LEVEL:	5.0'	WEIGHT:	3244.93 Lbs
DESIGN SPEC:	ASTM C857,ACI 318	LOADING SPEC:	A-16 (AASHTO HS20-44)
AGENCY:	PGE Portland	AGENCY SPEC:	233

JENSEN PRECAST EST. 1968

WWW.JENSENPRECAST.COM

©2019 Jensen Precast- All rights reserved.
All materials appearing as Jensen Precast documents and the like are proprietary work product and are protected under U.S. copyright and other laws.
Unless in conjunction with business conducted with Jensen Precast, any use of Jensen Precast work product without express, written consent is prohibited, and recipient is prohibited from distributing any and all work product to non-approved third parties under penalty of civil action.

DESCRIPTION:	Utility Vault 2436 Layout Assembly PGE Portland 233 LAYOUT REVIEW		REV: B-7
PART NUMBER:	400000798	DRAWN BY:	E. Fine
CREATED:	10/28/2019	MODIFIED:	12/6/2022

SHEET: 2 OF 2

400000798.idw