DESIGN NOTES
■ FOR COMPLETE DESIGN AND PRODUCT INFORMATION CONTACT JENSEN PRECAST.

BILL OF MATERIALS

ITEM	UNIT QTY	QTY	PART NUMBER	DESCRIPTION
1	22.506 ft^3	22.506 ft^3	100011425	CONCRETE MIX GENERIC 5000 PSI
2	1	4	100002867	ANCHOR DOGBONE LIFT 2T X 3-3/8 GALV MB DB-52
3	1	1	400000529	REINFORCING MAT 400000529

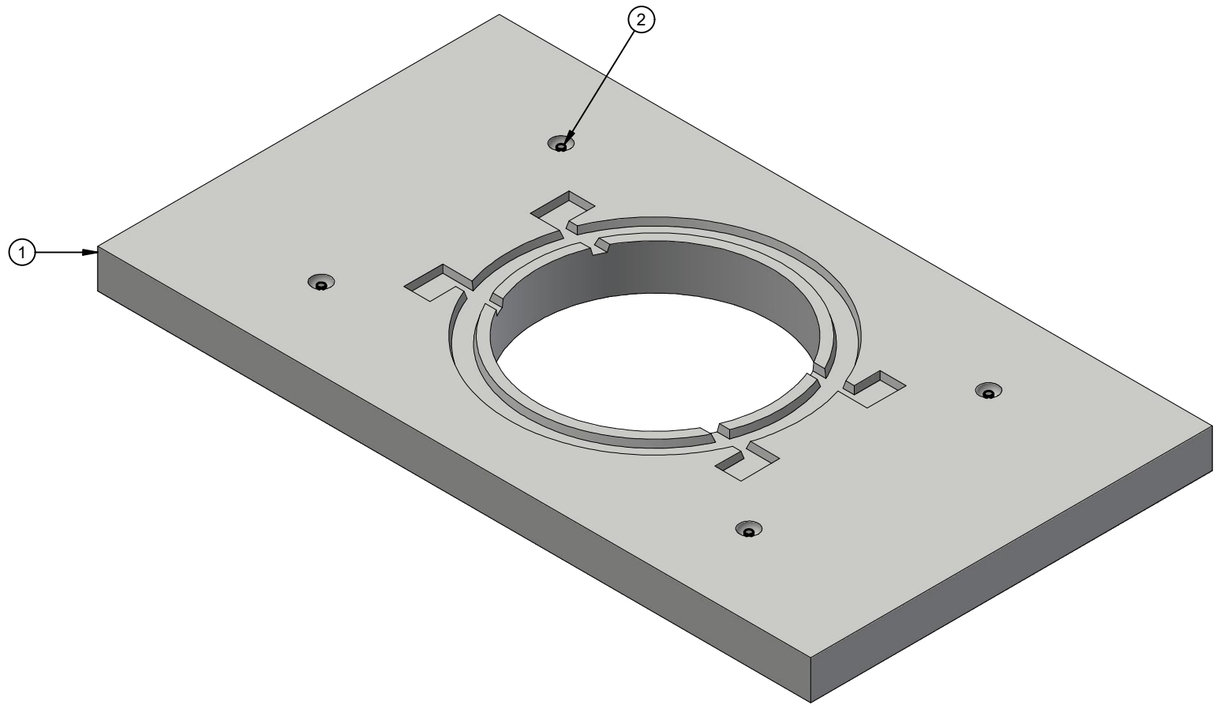

ISO LAYOUT

400000528.idw

LIFTING NOTES
■ PLANT DEMOLDING AND FIELD INSTALLATION: MINIMUM HANDLING CONCRETE STRENGTH F'c = 2500 PSI RIGGING EQUALIZER REQUIRED TO EQUALIZE LOAD TO 2 LIFTING POINTS WITH A SLING ANGLE BETWEEN 60° AND 90°

REVISION HISTORY			
REV	DESCRIPTION	DATE	BY
A	INITIAL RELEASE	06/03/2019	BTW

BURY DEPTH:	1.1' - 5.0' to Top of Top Slab		
WATER LEVEL:	Below Structure	WEIGHT:	3383.87 Lbs
DESIGN SPEC:	ASTM C857,ACI 318	LOADING SPEC:	A-16 (AASHTO HS20-44)
REINFORCEMENT TYPE:	Rebar	LIFTING TYPE:	Dogbone

JENSEN PRECAST EST. 1968

WWW.JENSENPRECAST.COM

©2019 Jensen Precast- All rights reserved.
All materials appearing as Jensen Precast documents and the like are proprietary work product and are protected under U.S. copyright and other laws.
Unless in conjunction with business conducted with Jensen Precast, any use of Jensen Precast work product without express, written consent is prohibited, and recipient is prohibited from distributing any and all work product to non-approved third parties under penalty of civil action.

DESCRIPTION:	Vault 54102 x 7 Slab Top 36 C CASTING LAYOUT			REV:
PART NUMBER:	400000528	DRAWN BY:	B. Evans	SHEET: 1 OF 2
CREATED:	6/3/2019	MODIFIED:	6/4/2019	

FEATURES		
ID	DESCRIPTION	QTY
A	Ø36" Opening w/ Keyway	1

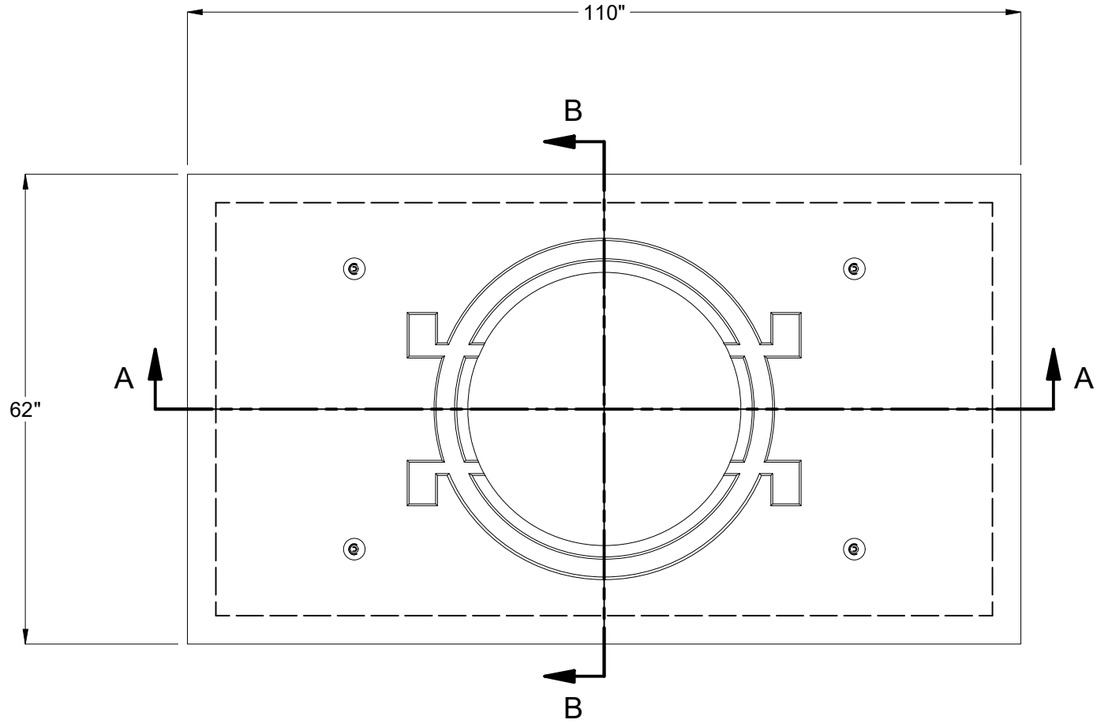

PLAN VIEW

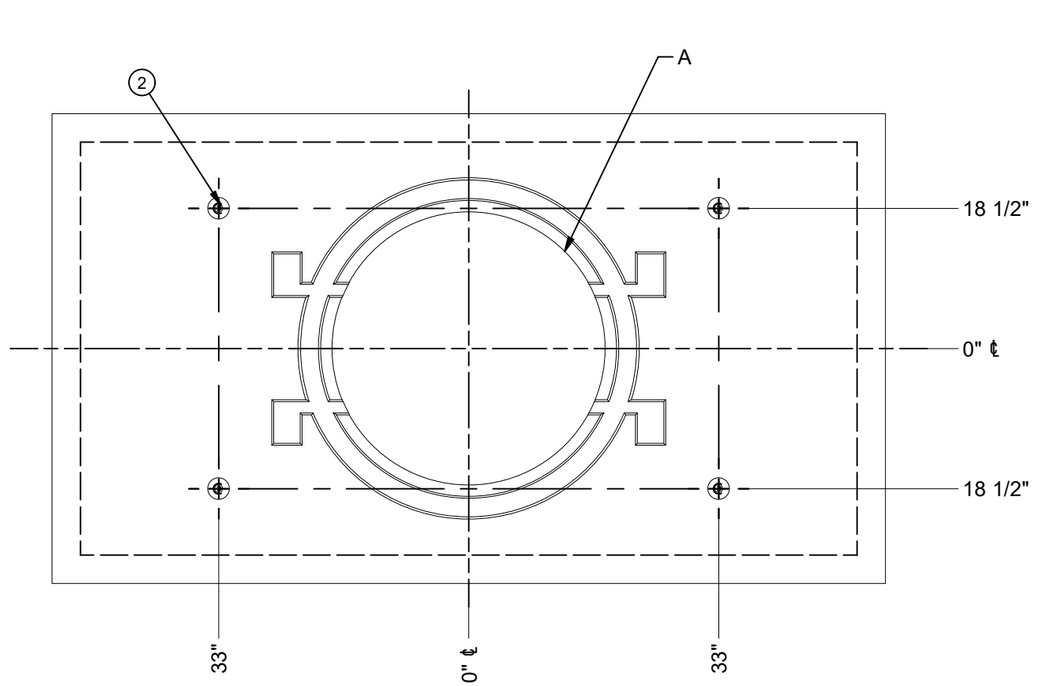

PLAN VIEW
(SHOWING OBJECT DIMENSIONS)



SECTION A-A

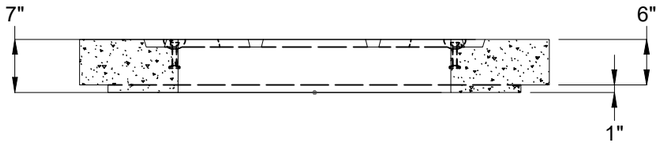

SECTION B-B

400000528.idw

BURY DEPTH:	1.1' - 5.0' to Top of Top Slab		
WATER LEVEL:	Below Structure	WEIGHT:	3383.87 Lbs
DESIGN SPEC:	ASTM C857,ACI 318	LOADING SPEC:	A-16 (AASHTO HS20-44)
REINFORCEMENT TYPE:	Rebar	LIFTING TYPE:	Dogbone

JENSEN PRECAST EST. 1968

WWW.JENSENPRECAST.COM

©2019 Jensen Precast- All rights reserved.
All materials appearing as Jensen Precast documents and the like are proprietary work product and are protected under U.S. copyright and other laws.
Unless in conjunction with business conducted with Jensen Precast, any use of Jensen Precast work product without express, written consent is prohibited, and recipient is prohibited from distributing any and all work product to non-approved third parties under penalty of civil action.

DESCRIPTION:	Vault 54102 x 7 Slab Top 36 C CASTING DRAWING		REV:
PART NUMBER:	400000528	DRAWN BY:	B. Evans
CREATED:	6/3/2019	MODIFIED:	6/4/2019

SHEET: 2 OF 2