DESIGN NOTES
■ THIS PRODUCT MUST ONLY BE PRODUCED IN A JENSEN INFRASTRUCTURE FACILITY.
■ ALL CONCRETE MUST HAVE A 28 DAY COMPRESSIVE STRENGTH OF 5000 PSI.
■ REINFORCING STEEL MUST COMPLY WITH ASTM A615 GRADE 60 OR ASTM A706 GRADE 60.
■ EQUIVALENT AREA WELDED WIRE REINFORCING CAGES MAY BE UTILIZED IN LIEU OF GRADE 60 REBAR.
■ WELDED WIRE REINFORCING MUST COMPLY WITH ASTM A1064.
■ SEE TITLE BLOCK FOR BURY DEPTH RANGE, WATER TABLE LEVEL, AND DESIGN AND LOADING SPECIFICATIONS.
■ SOIL UNIT WEIGHT DRY – 110 lbs/cu.ft.
■ EQUIVALENT LATERAL EARTH PRESSURE DRY: 40 lbs/cu.ft.
■ SOIL UNIT WEIGHT WET – 120 lbs/cu.ft
■ EQUIVALENT LATERAL EARTH PRESSURE WET: 80 lbs/cu.ft.
■ UNLESS OTHERWISE NOTED OR SPECIFIED THE STRUCTURE MUST BE INSTALLED PER "JENSEN INFRASTRUCTURE UNDERGROUND UTILITY STRUCTURES INSTALLATION PROCEDURE" FOUND AT https://www.jensenprecast.com/Utility-Structures-Installation-Instructions-d2595.pdf

BILL OF MATERIALS

ITEM	UNIT QTY	QTY	PART NUMBER	DESCRIPTION	MASS (lb)
1	1	1	100013475	CAS2-3048-AH4-TRX-G-CL-LV-NVE-OH06-(RS-80)	325
2	AS NEEDED	AS NEEDED	200039674	Riser 3048x6 Overton Power Extra Small	360
3	1	1	200039677	Riser 3048x12 Overton Power Extra Small	719
4	1	1	400008082	Vault 3048x30 Rect. Bottom Section Terminators Sump Overton Power Extra Small	2553

200114228.idw

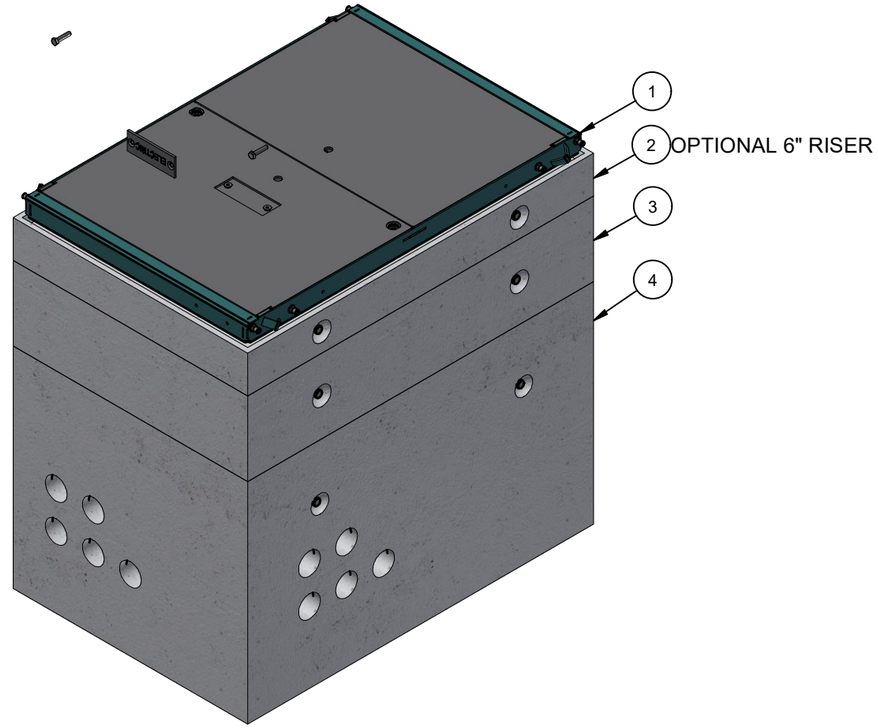

ISO VIEW

CHANGE HISTORY			
NO.	DESCRIPTION	DATE	BY
1	INITIAL RELEASE	7/14/2026	AMV
2			
3			

BURY DEPTH:	0.0' - 0.0' to Top		
WATER LEVEL:	5.0'	APPROX. WEIGHT:	3909.82 Lbs
DESIGN SPEC:	ACI 318,ASTM C857	LOADING SPEC:	A-03 (300 psf)
AGENCY:	Overton Power	AGENCY SPEC:	Extra Small

Infrastructure
JENSEN
WWW.JENSENINFRASTRUCTURE.COM

©2026 Jensen Infrastructure - All rights reserved.
All materials appearing as Jensen Infrastructure documents and the like are proprietary work product and are protected under U.S. copyright and other laws.
Unless in conjunction with business conducted with Jensen Infrastructure, any use of Jensen Infrastructure work product without express, written consent is prohibited, and recipient is prohibited from distributing any and all work product to non-approved third parties under penalty of civil action.
This product shall only be produced in a Jensen Infrastructure facility.

DESCRIPTION:	Vault Layout 3048x52 Terminators Sump 30"x48"C Overton Power Extra Small LAYOUT REVIEW		
PART NUMBER:	200114228	DRAWN BY:	A. Viveiros
CREATED:	6/28/2018	MODIFIED:	7/14/2026

REV: A-1

SHEET: 1 OF 2

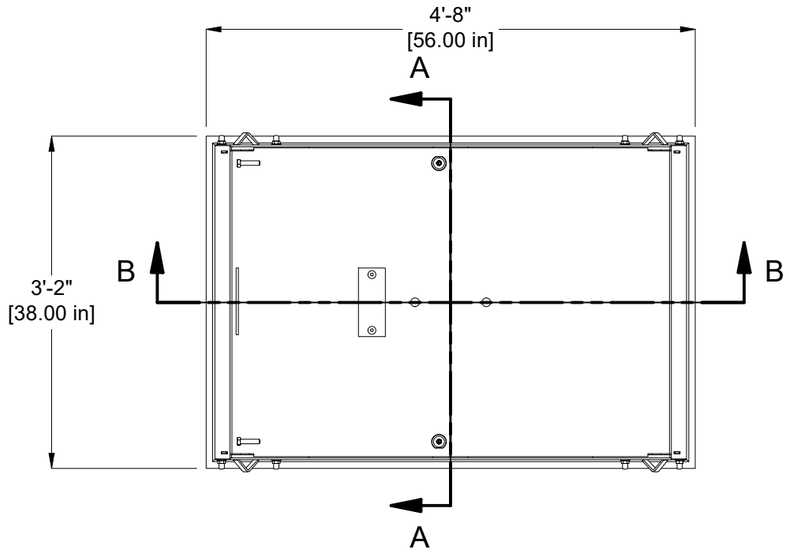

PLAN VIEW

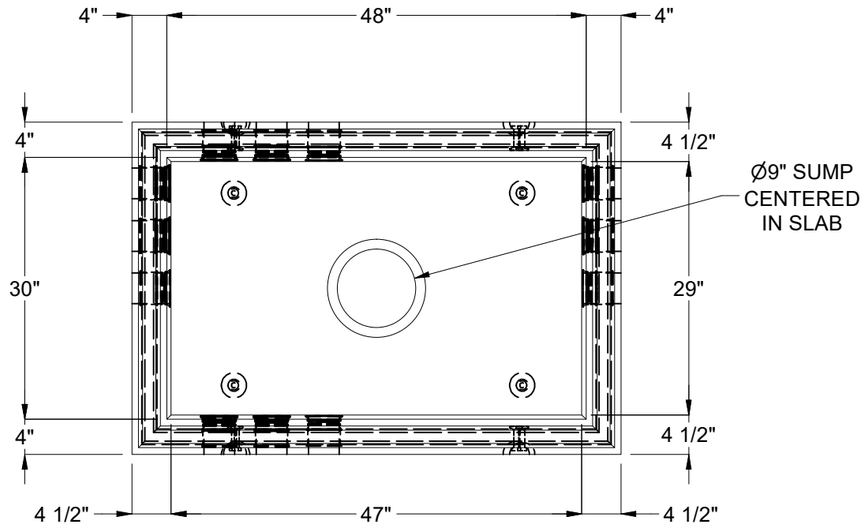

PLAN VIEW
(COVER NOT SHOWN)

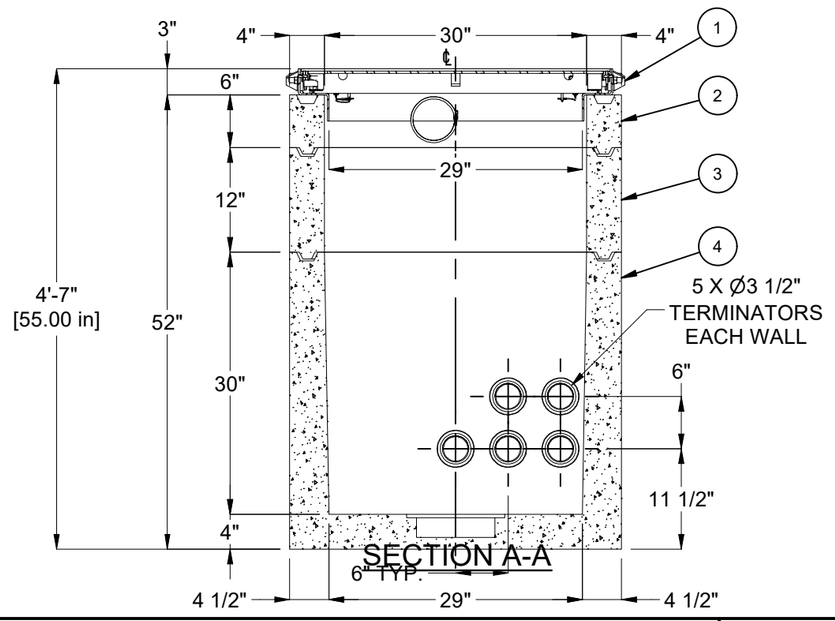

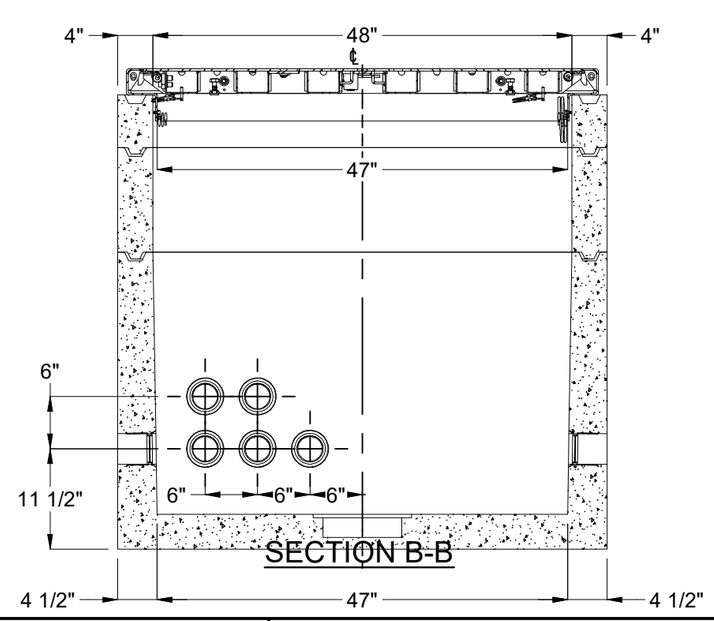

BURY DEPTH:	0.0' - 0.0' to Top		
WATER LEVEL:	5.0'	APPROX. WEIGHT:	3909.82 Lbs
DESIGN SPEC:	ACI 318,ASTM C857	LOADING SPEC:	A-03 (300 psf)
AGENCY:	Overton Power	AGENCY SPEC:	Extra Small

Infrastructure
JENSEN
WWW.JENSENINFRASTRUCTURE.COM

©2026 Jensen Infrastructure - All rights reserved.
All materials appearing as Jensen Infrastructure documents and the like are proprietary work product and are protected under U.S. copyright and other laws.
Unless in conjunction with business conducted with Jensen Infrastructure, any use of Jensen Infrastructure work product without express, written consent is prohibited, and recipient is prohibited from distributing any and all work product to non-approved third parties under penalty of civil action.
This product shall only be produced in a Jensen Infrastructure facility.

DESCRIPTION:
Vault Layout 3048x52 Terminators Sump 30"x48"C Overton Power Extra Small
LAYOUT DRAWING

REV: A-1

PART NUMBER:	200114228	DRAWN BY:	A. Viveiros
CREATED:	6/28/2018	MODIFIED:	7/14/2026

SHEET: 2 OF 2

200114228.idw