DESIGN NOTES:

- CONCRETE SHALL HAVE A 28 DAY MINIMUM COMPRESSIVE STRENGTH OF 5000 PSI
- SOIL UNIT WEIGHT DRY - 110 lbs/cu.ft.
- EQUIVALENT LATERAL PRESSURE DRY - 40 lbs/cu.ft.
- SOIL UNIT WEIGHT WET - 120 lbs/cu.ft.
- EQUIVALENT LATERAL PRESSURE WET - 80 lbs/cu.ft.

PRODUCTION NOTES:

- THIS PRODUCT SHALL ONLY BE PRODUCED IN A JENSEN INFRASTRUCTURE FACILITY
- LIFTING INSERTS SHALL BE INSTALLED PER MANUFACTURER'S REQUIREMENTS
- APPLIED FINISH -
- INTERNAL LINER/COATING -
- EXTERNAL LINER/COATING -

BILL OF MATERIALS

ITEM	UNIT QTY	QTY	PART NUMBER	DESCRIPTION
1	18.676 ft^3	18.676 ft^3	100011425	CONCRETE MIX GENERIC 5000 PSI
2	4.000 in	8.000 in	100031103	STRUT C-CHANNEL CONCRETE INSERT 1-5/8 X 7/8 12GA W/ANCHORS GALV
3	1	1	100040738	GROUND INSERT BOTTLE ROCKET 1/2-13 BRONZE w/ 0.375x36" STEEL ROD
4	1	1	300150364	REINFORCING MAT 300150364
5	48.0000 in	48.0000 in	100003042	STRUT C-CHANNEL 1-5/8 X 1-5/8 12GA SOLID GALV
6	48.000 in	48.000 in	100040159	STRUT C-CHANNEL CONCRETE INSERT 1-5/8 X 3-1/4 12GA DOUBLE COMBINATION P1001B GALV

200101942.idw

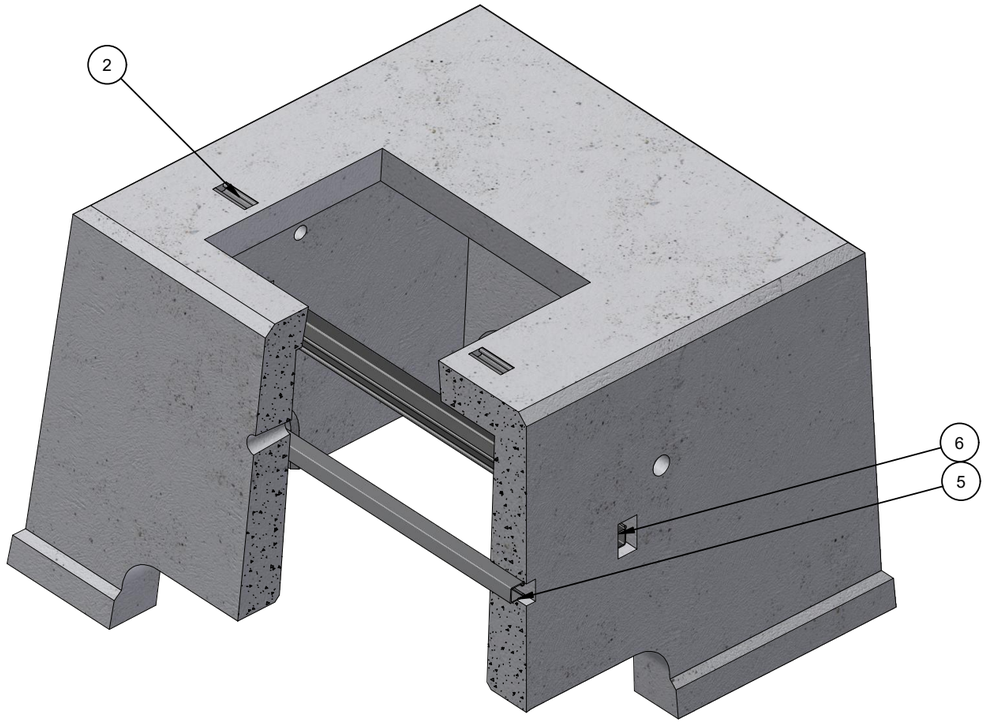

ISO LAYOUT

LIFTING NOTES
■ THIS CONCRETE PRODUCT IS DESIGNED TO BE LIFTED AT 2500 PSI WITH 4 LIFT CONNECTIONS EQUALLY LOADED TO 2 LIFTING POINTS AT A MINIMUM 60° SLING ANGLE, MEASURED FROM HORIZONTAL.
*All rigging shall be design by a qualified professional. Loading diagrams show illustrations of possible rigging setups to achieve the required sling angle and load leg equalization. Other valid rigging configurations are possible. A qualified professional must be consulted prior to lifting.

RIGGING DIAGRAM*	B

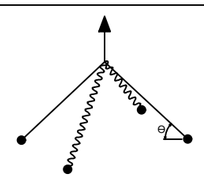

BURY DEPTH:	0.0' - 1.0' to Top		
WATER LEVEL:	5.0'	APPROX. WEIGHT:	2832.32 Lbs
DESIGN SPEC:	ACI 318,ASTM C857	LOADING SPEC:	300 psf Equipment
REINFORCEMENT TYPE:	Rebar	LIFTING TYPE:	Lift Hole

Infrastructure
JENSEN
WWW.JENSENPRECAST.COM

©2025 Jensen Infrastructure - All rights reserved.
All materials appearing as Jensen Infrastructure documents and the like are proprietary work product and are protected under U.S. copyright and other laws.
Unless in conjunction with business conducted with Jensen Infrastructure , any use of Jensen Infrastructure work product without express, written consent is prohibited, and recipient is prohibited from distributing any and all work product to non-approved third parties under penalty of civil action. This product shall only be produced in a Jensen Infrastructure facility.

CHANGE HISTORY

NO.	DESCRIPTION	DATE	BY
1	2407-57392-17	6/2/2025	AMV
2	REVISED BOM STRUCTURE	7/18/2025	AMV

DESCRIPTION:	Pad Mount Vault 4848x34 2126"E PSE MID 7663002 CASTING LAYOUT		REV: B-1
PART NUMBER:	200101942	DRAWN BY:	A. Viveiros
CREATED:	6/2/2025	MODIFIED:	7/21/2025
			SHEET: 1 OF 2

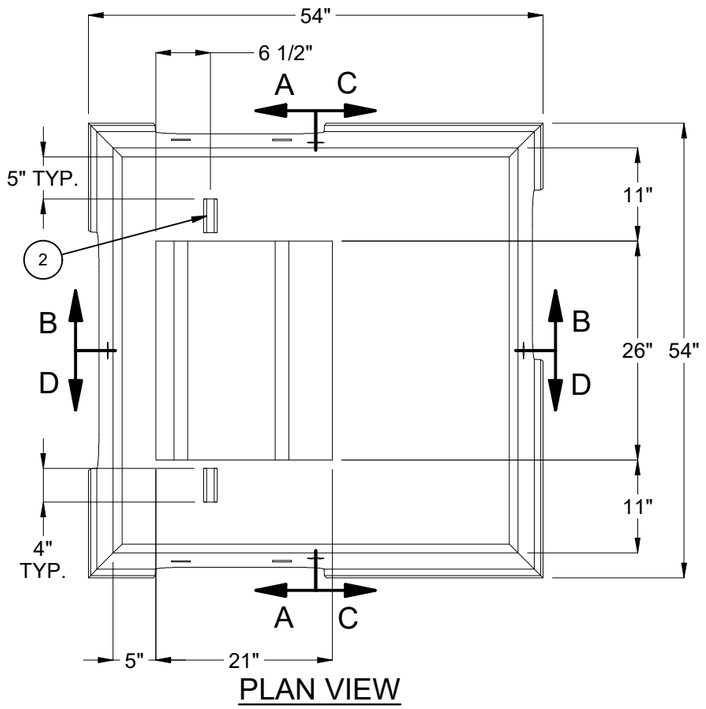

PLAN VIEW

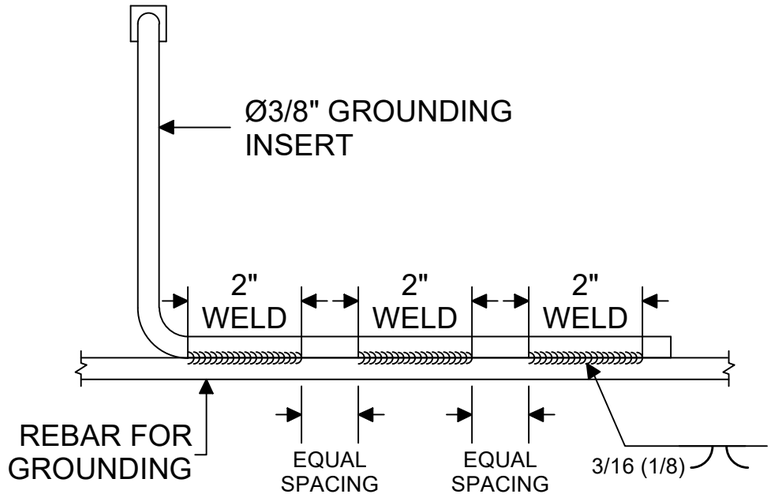

DETAIL 1

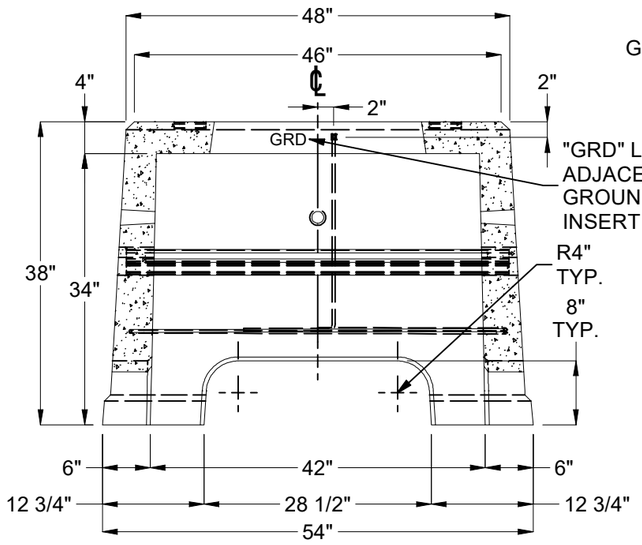

SECTION A-A

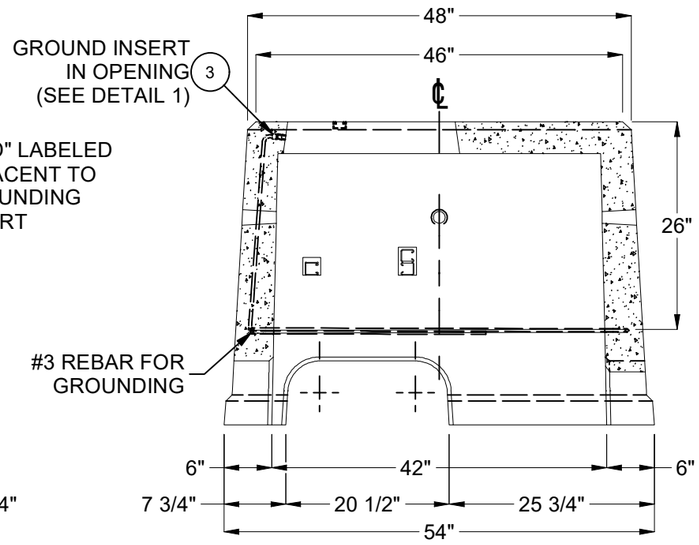

SECTION B-B

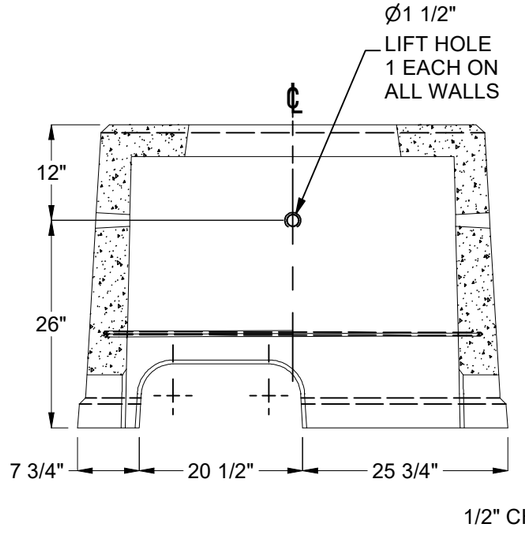

SECTION C-C

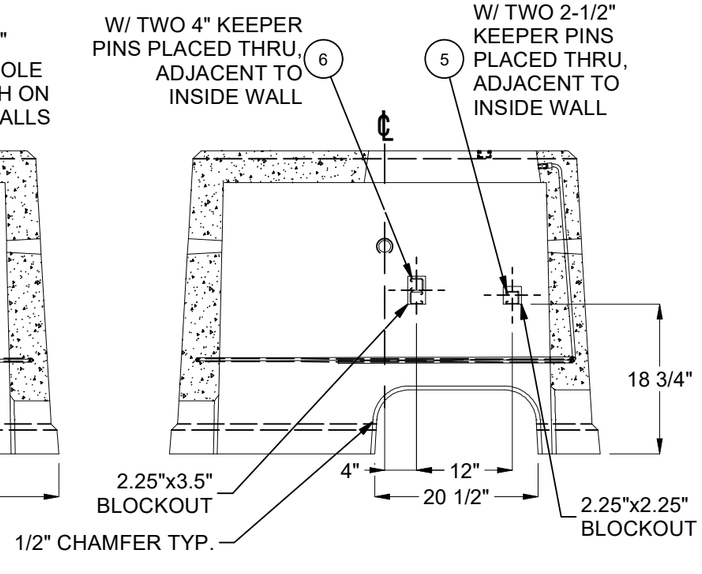

SECTION D-D

BURY DEPTH:	0.0' - 1.0' to Top		
WATER LEVEL:	5.0'	APPROX. WEIGHT:	2832.32 Lbs
DESIGN SPEC:	ACI 318,ASTM C857	LOADING SPEC:	300 psf Equipment
REINFORCEMENT TYPE:	Rebar	LIFTING TYPE:	Lift Hole

Infrastructure
JENSEN
WWW.JENSENPRECAST.COM

©2025 Jensen Infrastructure - All rights reserved.
All materials appearing as Jensen Infrastructure documents and the like are proprietary work product and are protected under U.S. copyright and other laws.
Unless in conjunction with business conducted with Jensen Infrastructure , any use of Jensen Infrastructure work product without express, written consent is prohibited, and recipient is prohibited from distributing any and all work product to non-approved third parties under penalty of civil action. This product shall only be produced in a Jensen Infrastructure facility.

DESCRIPTION:	Pad Mount Vault 4848x34 2126"E PSE MID 7663002 CASTING DRAWING		REV: B-1
PART NUMBER:	200101942	DRAWN BY:	A. Viveiros
CREATED:	6/2/2025	MODIFIED:	7/21/2025
			SHEET: 2 OF 2

200101942.idw