NOTES
■ DESIGNED IN ACCORDANCE WITH AASHTO HS20-44 TRAFFIC BRIDGE LOADING USING 5,500 PSI COMPRESSIVE STRENGTH CONCRETE AND 60,000 PSI YIELD STRENGTH ASTM A-706 STEEL REINFORCEMENT PER CALCS. #31036.
■ ALL PARTS TO BE STENCILED: MFG DATE / JOB NUMBER / PRODUCT ID / WEIGHT.

BILL OF MATERIALS

ITEM	UNIT QTY	QTY	PART NUMBER	DESCRIPTION
1	94.185 ft^3	94.185 ft^3	100006029	CONCRETE 5500 PSI SCC ED
2	1	4	100002877	ANCHOR DOGBONE P52 4T X 9-1/2" GALV
3	1	16	100005936	TERMINATOR DUCT WITH SEAL 5IN T5001
4	1	4	100005932	INSERT GROUND BRONZE BOTTLE ROCKET 1/2-13 UNC WITH 11IN COPPER ROD 12H69
5	1	2	100005715	PIPE SCH 40 1IN PVC W/CAP 6"L
6	1	6	100003026	PULL IRON OFFSET .875DIA 6H X 5W X 10.875L GALV
7	1	2	100013013	ANGLE EMBEDDED SS 3 X 3 X 1/4 X 6 W/3 ANCHORS
8	1	4	100002777	INSERT FERRULE LOOP 1/2 X 2-3/4 SS FX-5
9	1	1	100017614	REINFORCING MAT 100017614

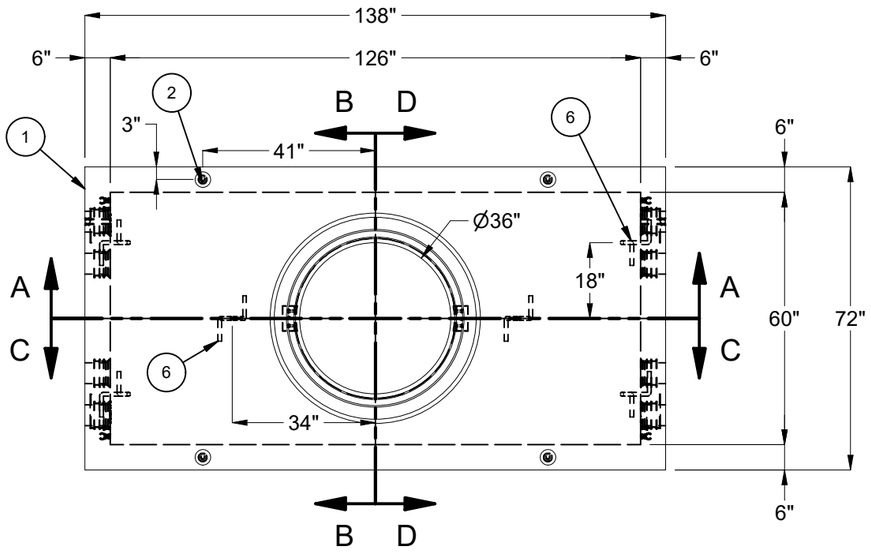

PLAN VIEW

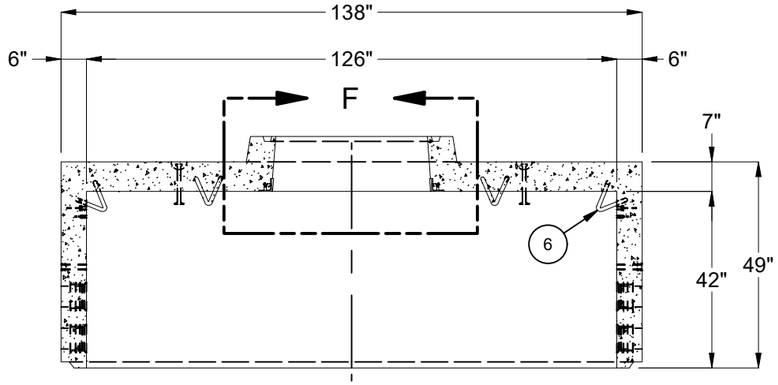

SECTION A-A

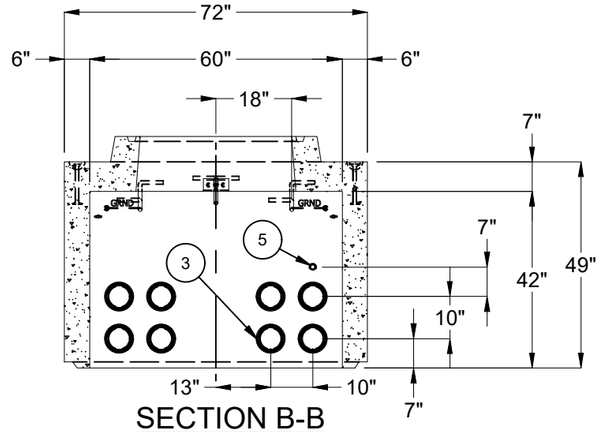

SECTION B-B

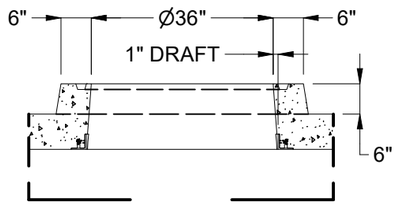

DETAIL F
TYP OPP. END

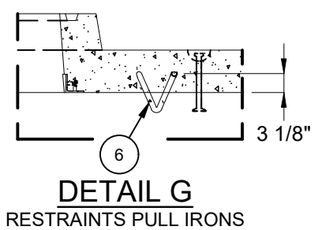

DETAIL G
RESTRAINTS PULL IRONS

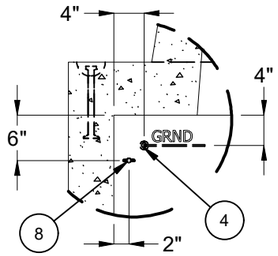

DETAIL H
TYP (4) CORNERS

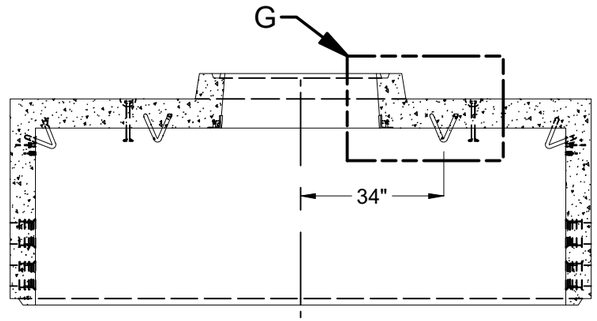

SECTION C-C

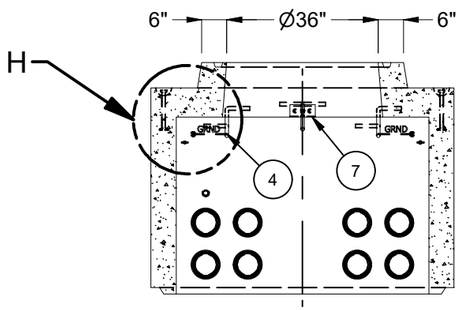

SECTION D-D

LIFTING NOTES
■ INSTALLATION: THIS CONCRETE PRODUCT IS DESIGNED TO BE LIFTED AT 5500 PSI WITH 4 LIFT CONNECTIONS EQUALLY LOADED TO 4 LIFTING POINTS AT A MINIMUM 60° SLING ANGLE, MEASURED FROM HORIZONTAL.
■ DEMOLDING: THIS CONCRETE PRODUCT IS DESIGNED TO BE LIFTED AT 2500 PSI WITH 4 LIFT CONNECTIONS EQUALLY LOADED TO 4 LIFTING POINTS AT A MINIMUM 90° SLING ANGLE, MEASURED FROM HORIZONTAL.
*All rigging shall be design by a qualified professional. Loading diagrams show illustrations of possible rigging setups to achieve the required sling angle and load leg equalization. Other valid rigging configurations are possible. A qualified professional must be consulted prior to lifting.

RIGGING DIAGRAMS*

INSTALLATION	C	DEMOLDING	E

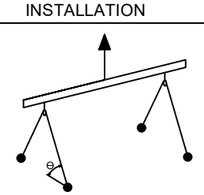

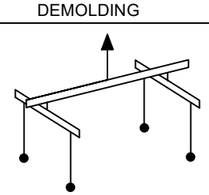

BURY DEPTH:	0.0' - 4.0' to Top		
WATER LEVEL:	3.0'	APPROX. WEIGHT:	14179.22 Lbs
DESIGN SPEC:	ACI 318,ASTM C857	LOADING SPEC:	A-16 (AASHTO HS20-44)
REINFORCEMENT TYPE:	Rebar	LIFTING TYPE:	Dogbone

Infrastructure
JENSEN
WWW.JENSENPRECAST.COM

©2025 Jensen Infrastructure - All rights reserved.
All materials appearing as Jensen Infrastructure documents and the like are proprietary work product and are protected under U.S. copyright and other laws.
Unless in conjunction with business conducted with Jensen Infrastructure , any use of Jensen Infrastructure work product without express, written consent is prohibited, and recipient is prohibited from distributing any and all work product to non-approved third parties under penalty of civil action. This product shall only be produced in a Jensen Infrastructure facility.

DESCRIPTION:	Vault 60126x42 Rect. Top Section 36"C Terminators,Opening Edison UGS MH 310 CASTING LAYOUT		REV: A-1
PART NUMBER:	200101333	DRAWN BY:	J.Rivas
CREATED:	5/12/2025	MODIFIED:	5/12/2025
			SHEET: 1 OF 1

200101333.idw