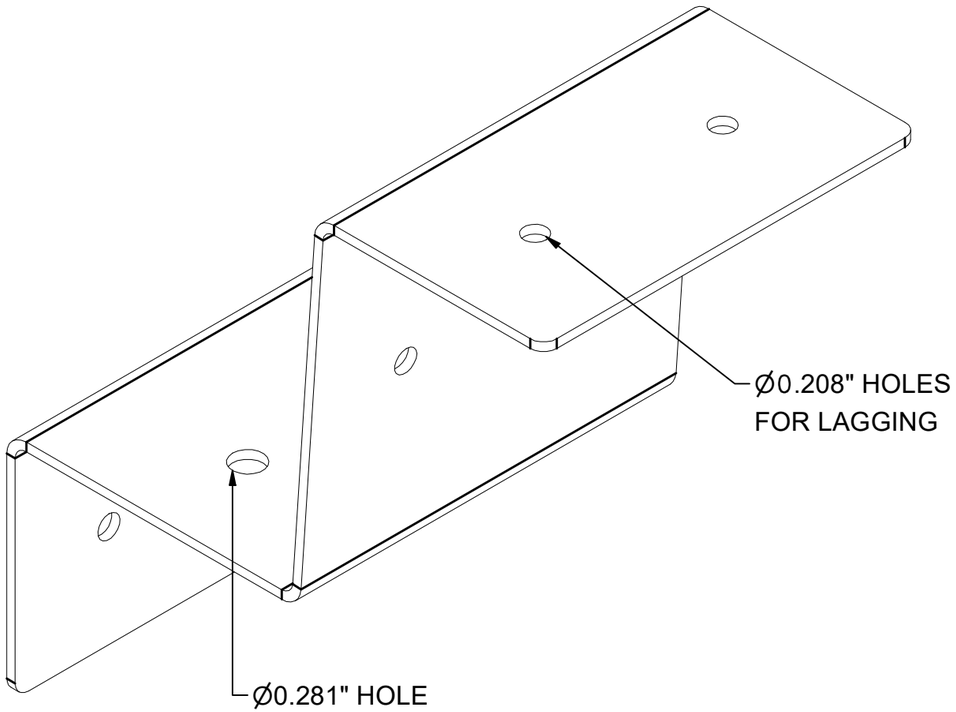

FOR 3X3 POST CONCRETE 200075477

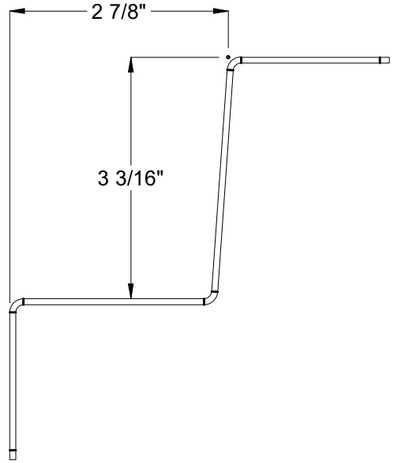

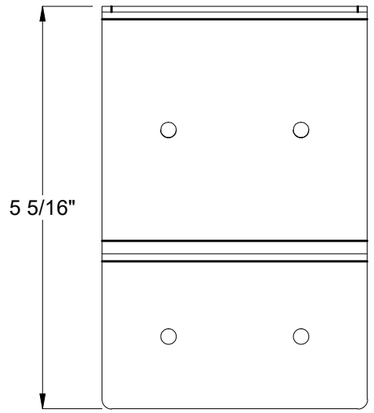

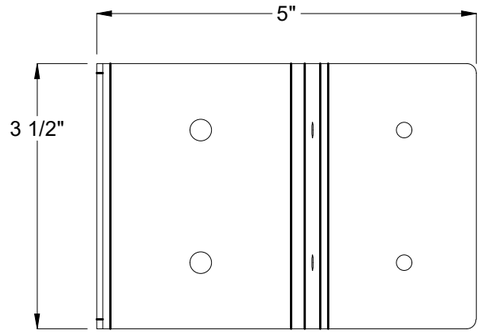

200094830.idw

LOADING CRITERIA: N/A

SURFACE:	Smooth	FINISH:	Plated
WEIGHT:	0.78 lbs	MARKING:	

Infrastructure
JENSEN
450 E. GLENDALE AVE. SPARKS. NV 89431
775-352-2716 FAX: 755-358-8127
JENSENMETALTECH.COM

©2025 Jensen Infrastructure - All rights reserved.
All materials appearing as Jensen Infrastructure documents and the like are proprietary work product and are protected under U.S. copyright and other laws. Unless in conjunction with business conducted with Jensen Infrastructure , any use of Jensen Infrastructure work product without express, written consent is prohibited, and recipient is prohibited from distributing any and all work product to non-approved third parties under penalty of civil action.
This product shall only be produced in a Jensen Infrastructure facility.

DESCRIPTION:	3x3 Harvest Pillar Corner Bracket 3x3 Harvest Pillar Corner Bracket	REV:	A-1-2
PART NUMBER:	200094830	DRAWN BY:	R. Dohr
CREATED:	10/21/2024	MODIFIED:	12/12/2025
		SHEET:	1

BEND DIRECTION CRITICAL

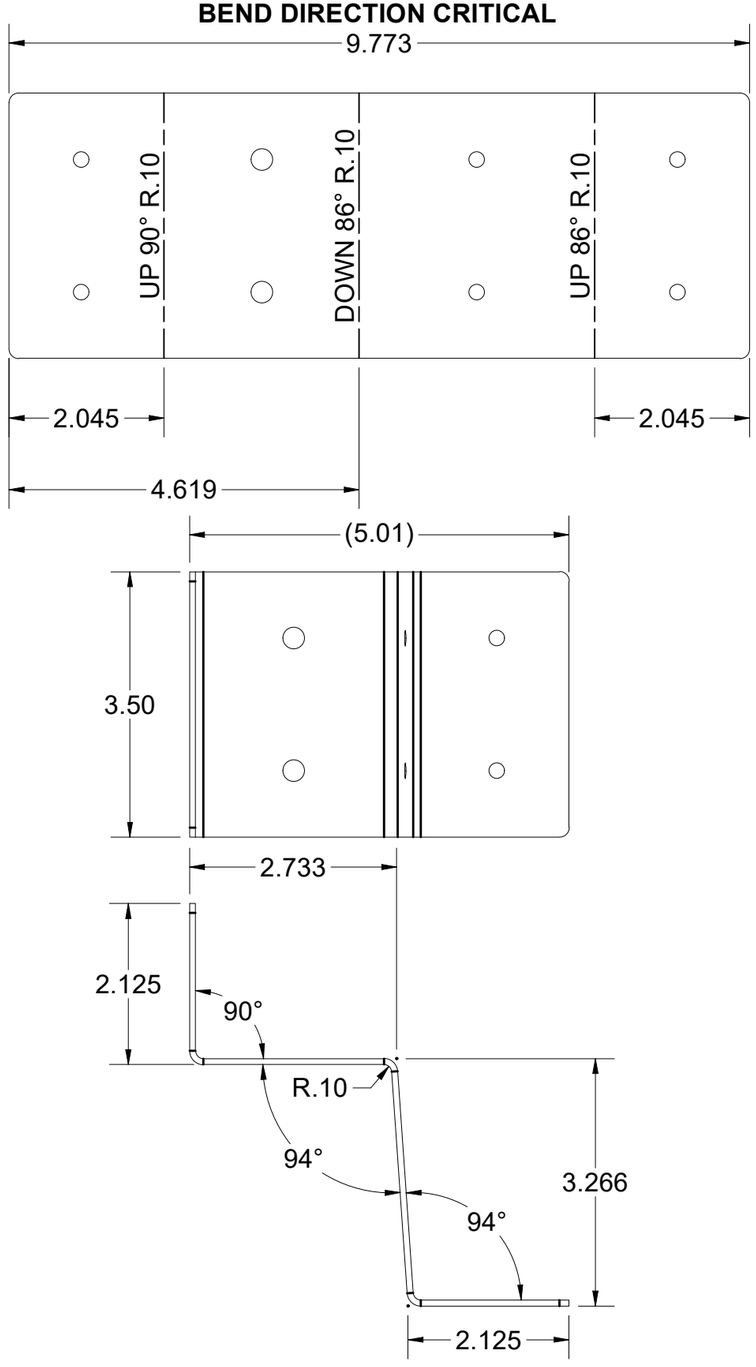

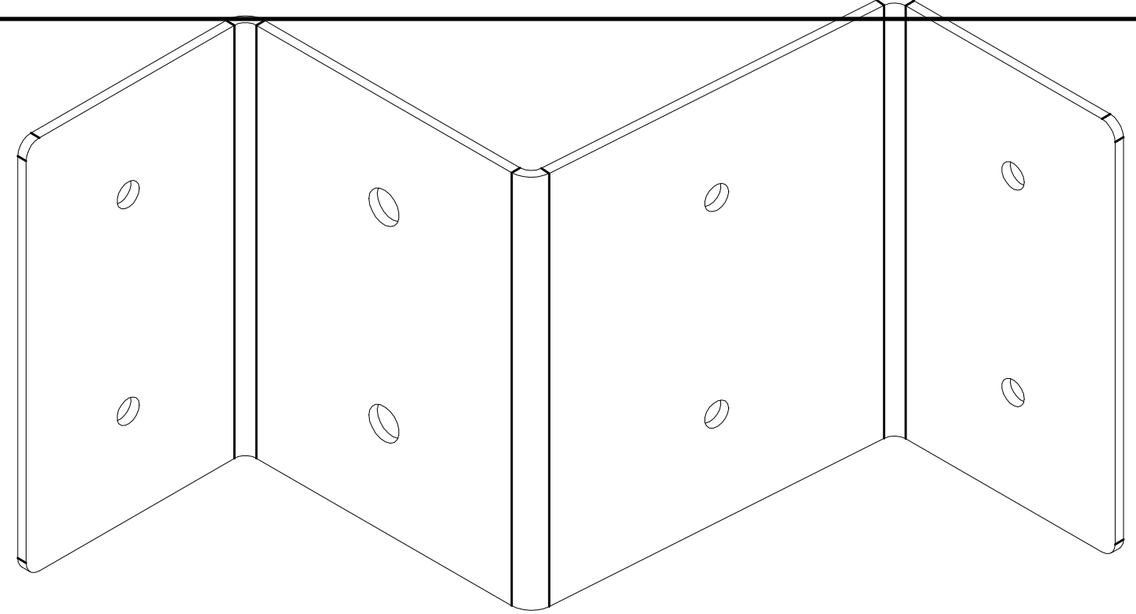

200094830.idw

REVISION HISTORY	
DESCRIPTION	DATE
INCREASED BASE FLANGE WIDTH BY ~1/8"	10/28/2024
INCREASED BOLT DOWN FLANGE LENGTHS BY 3/4" EACH	12/16/24
SWAPPED TO GR80 11GA MATERIAL; REMOVED LARGE FLANGE HOLES AND REDUCED WEB HOLE DIAMETERS TO MATCH FLANGE HOLES; ADDED "PLATED" FINISH	7/31/2025
REVERTED TO 14GA MATERIAL	12/12/2025

BEND TABLE

BEND RADIUS	V-OPENING	BEND ANGLE	BEND DEDUCTION
0.103291	1	86 90	-1 -1

MATERIAL IFS: 100007815

MATERIAL THK: 0.078

MAT DESCRIPTION: SHT STL G90 GA-14 GALV .078

Infrastructure
JENSEN
450 E. GLENDALE AVE. SPARKS. NV 89431
775-352-2716 FAX: 755-358-8127
JENSENMETALTECH.COM

©2025 Jensen Infrastructure - All rights reserved. All materials appearing as Jensen Infrastructure documents and the like are proprietary work product and are protected under U.S. copyright and other laws. Unless in conjunction with business conducted with Jensen Infrastructure , any use of Jensen Infrastructure work product without express, written consent is prohibited, and recipient is prohibited from distributing any and all work product to non-approved third parties under penalty of civil action. This product shall only be produced in a Jensen Infrastructure facility.

NAME & DESCRIPTION: 200094830 — 3x3 Harvest Pillar Corner Bracket

REV: A-1-2

WEIGHT: 0.779 lbmass

DRAWN BY: R. Dohr

SHEET: 2 OF 2

CREATED: 10/21/2024

MODIFIED: 12/12/2025