DESIGN NOTES
■ THIS PRODUCT SHALL ONLY BE PRODUCED IN A JENSEN PRECAST FACILITY.
■ ALL CONCRETE SHALL HAVE A MINIMUM 28 DAY COMPRESSIVE STRENGTH OF 5000 PSI.
■ REINFORCING STEEL SHALL COMPLY WITH ASTM A615 GRADE 60 OR ASTM A706 GRADE 60.
■ EQUIVALENT AREA WELDED WIRE REINFORCING CAGES MAY BE UTILIZED IN LIEU OF GRADE 60 REBAR.
■ WELDED WIRE REINFORCING SHALL COMPLY WITH ASTM A1064.
■ SEE TITLE BLOCK FOR BURY DEPTH RANGE, WATER TABLE LEVEL, AND DESIGN AND LOADING SPECIFICATIONS.
■ SOIL UNIT WEIGHT DRY – 100 lbs/cu.ft.
■ EQUIVALENT LATERAL EARTH PRESSURE DRY: 30 lbs/cu.ft.
■ SOIL UNIT WEIGHT DRY – 120 lbs/cu.ft
■ EQUIVALENT LATERAL EARTH PRESSURE WET: 80 lbs/cu.ft.
■ UNLESS OTHERWISE NOTED OR SPECIFIED THE STRUCTURE SHALL BE INSTALLED PER "JENSEN PRECAST UNDERGROUND WASTE-WATER PRECAST CONCRETE TANK INSTALLATION PROCEDURE" FOUND AT https://www.jensenprecast.com/Tank-Installation-Procedure-d2106.pdf
■ CALCULATION NUMBER(S): #54239-JOP1000 AND #54239-JOP1000TS

BILL OF MATERIALS

ITEM	QTY	PART NUMBER	DESCRIPTION
1	1	200093336	Tank JOS 1000 Gallon x 5 Slab Top 24"E, 24"E Tuf-Tite
2	1	200093029	Tank JOP 1000 Gallon 6 Inch Rect. Bottom Section Single Baffle Recess
3	1	200093034	Vertical Slab Baffle JOP 1000 6 Inch
4	2.000 ul	100013648	SEALANT JOINT BUTYL RUBBER ASTM C-990 AND M198 CS-102 1IN EQUIV X14.5FT PER ROLL

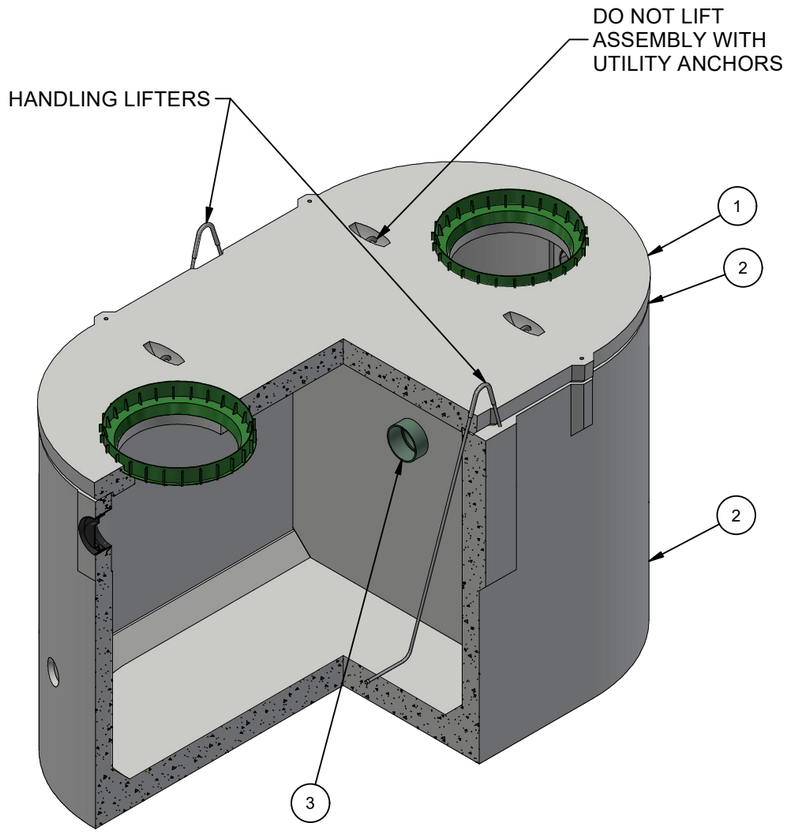

ISO VIEW
ASSEMBLED

LIFTING NOTES
■ THIS CONCRETE PRODUCT IS DESIGNED TO BE LIFTED AT 2500 PSI WITH 2 LIFT CONNECTIONS EQUALLY LOADED TO 2 LIFTING POINTS AT A MINIMUM 60° SLING ANGLE, MEASURED FROM HORIZONTAL.
*All rigging shall be design by a qualified professional. Loading diagrams show illustrations of possible rigging setups to achieve the required sling angle and load leg equalization. Other valid rigging configurations are possible. A qualified professional must be consulted prior to lifting.

RIGGING DIAGRAM*	F

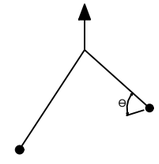

CHANGE HISTORY			
NO.	DESCRIPTION	DATE	BY
1	2208-54239	9/1/2024	

BURY DEPTH:	0.0' - 3.0' to Top		
WATER LEVEL:	Below Structure	APPROX. WEIGHT:	13100.78 Lbs
DESIGN SPEC:	ACI 318,ASTM C890	LOADING SPEC:	A-02 (200 psf)
AGENCY:		AGENCY SPEC:	

JENSEN PRECAST EST. 1968

WWW.JENSENPRECAST.COM

©2024 Jensen Precast- All rights reserved.
All materials appearing as Jensen Precast documents and the like are proprietary work product and are protected under U.S. copyright and other laws.
Unless in conjunction with business conducted with Jensen Precast, any use of Jensen Precast work product without express, written consent is prohibited, and recipient is prohibited from distributing any and all work product to non-approved third parties under penalty of civil action.

DESCRIPTION:	Tank JOS 1000 Gallon 6 Inch Assembly 24"E, 24"E Tuf-Tite Single Baffle LAYOUT REVIEW		REV: A
PART NUMBER:	200093381	DRAWN BY:	B. Evans
CREATED:	12/22/2023	MODIFIED:	9/9/2024
			SHEET: 1 OF 2

200093381.idw

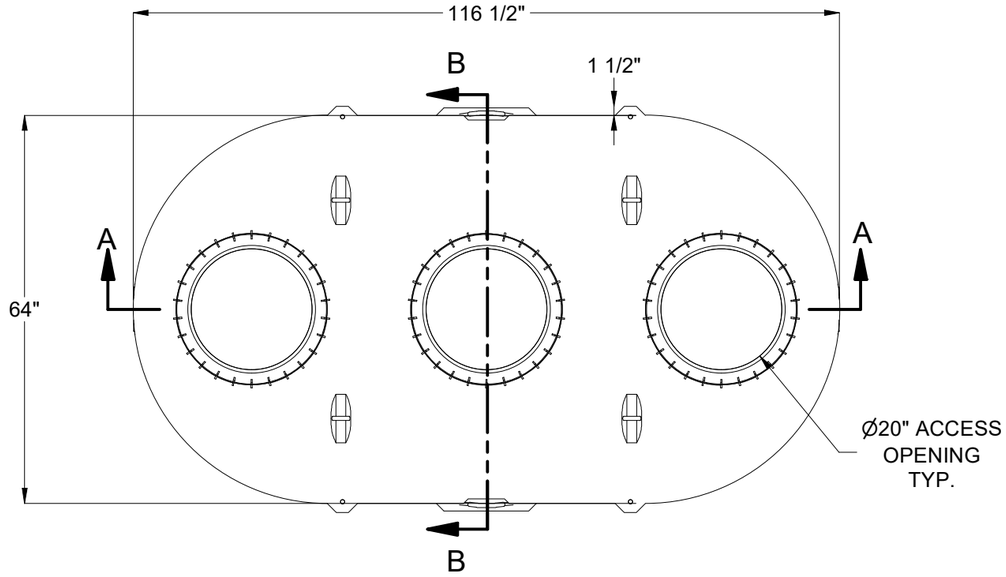

PLAN VIEW

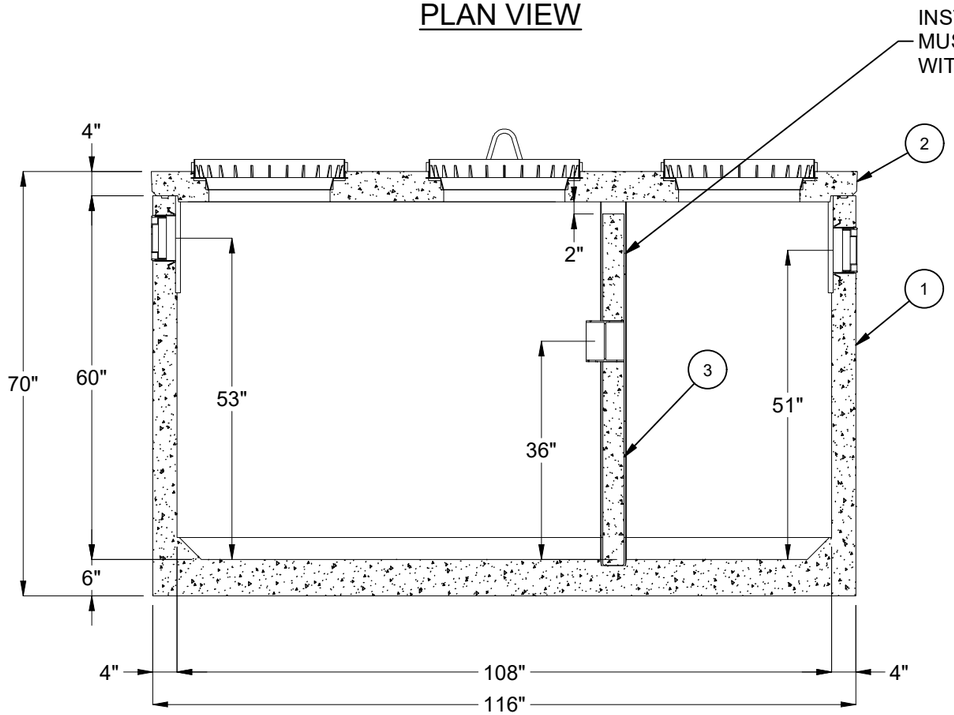

SECTION A-A

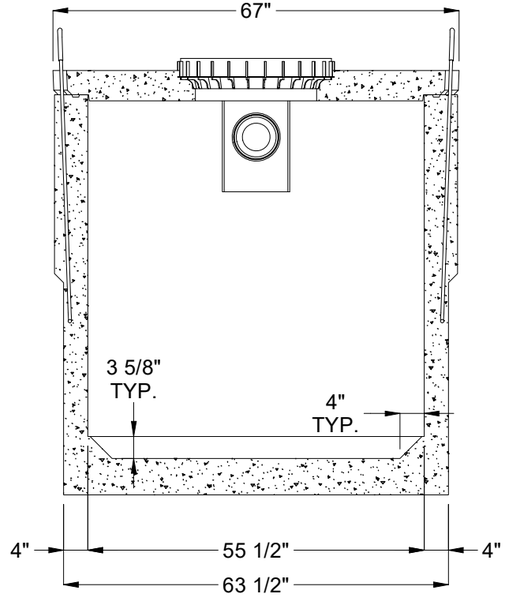

SECTION B-B

BURY DEPTH:	0.0' - 3.0' to Top		
WATER LEVEL:	Below Structure	APPROX. WEIGHT:	12940.57 Lbs
DESIGN SPEC:	ACI 318,ASTM C890	LOADING SPEC:	A-02 (200 psf)
AGENCY:		AGENCY SPEC:	

JENSEN PRECAST EST. 1968

WWW.JENSENPRECAST.COM

©2024 Jensen Precast- All rights reserved.
All materials appearing as Jensen Precast documents and the like are proprietary work product and are protected under U.S. copyright and other laws.
Unless in conjunction with business conducted with Jensen Precast, any use of Jensen Precast work product without express, written consent is prohibited, and recipient is prohibited from distributing any and all work product to non-approved third parties under penalty of civil action.

DESCRIPTION:
Tank JOS 1000 Gallon 6 Inch Assembly 24"E, 24"C, 24"E Tuf-Tite Single Baffle
LAYOUT DRAWING

PART NUMBER:	200093380	DRAWN BY:	B. Evans
CREATED:	12/22/2023	MODIFIED:	9/9/2024

REV: A

SHEET: 2 OF 2

200093381.idw