DESIGN NOTES
■ THIS PRODUCT SHALL ONLY BE PRODUCED IN A JENSEN PRECAST FACILITY.
■ ALL CONCRETE SHALL HAVE A MINIMUM 28 DAY COMPRESSIVE STRENGTH OF 5000 PSI.
■ REINFORCING STEEL SHALL COMPLY WITH ASTM A615 GRADE 60 OR ASTM A706 GRADE 60.
■ EQUIVALENT AREA WELDED WIRE REINFORCING CAGES MAY BE UTILIZED IN LIEU OF GRADE 60 REBAR.
■ WELDED WIRE REINFORCING SHALL COMPLY WITH ASTM A1064.
■ SEE TITLE BLOCK FOR BURY DEPTH RANGE, WATER TABLE LEVEL, AND DESIGN AND LOADING SPECIFICATIONS.
■ SOIL UNIT WEIGHT DRY – 100 lbs/cu.ft.
■ EQUIVALENT LATERAL EARTH PRESSURE DRY: 30 lbs/cu.ft.
■ SOIL UNIT WEIGHT DRY – 120 lbs/cu.ft
■ EQUIVALENT LATERAL EARTH PRESSURE WET: 80 lbs/cu.ft.
■ IN COMPLIANCE WITH UNIFORM PLUMBING CODE (UPC), INTERNATIONAL PLUMBING CODE (IPC), AND STRUCTURAL LOADING REQUIREMENTS OF ASTM INTERNATIONAL C1613.
■ MINIMUM ONE (1) ACCESS OPENING PER COMPARTMENT REQUIRED (AS SHOWN). ADDITIONAL ACCESS CAN BE ADDED IN LIEU OF PLUG COVER WHEN REQUIRED BY THE AUTHORITY HAVING JURISDICITON.
■ MUST BE INSTALLED PER "JENSEN PRECAST UNDERGROUND WASTEWATER PRECAST CONCRETE TANK INSTALLATION PROCEDURE" WHICH CAN BE FOUND AT https://www.jensenprecast.com/Tank-Installation-Procedure-d2106.pdf. THIS PROCEDURE ADDRESSES REQUIRED EXCAVATION, SITE PREPARATION, INSTALLATION, VENTILATION, AND WATER/VACCUM TESTING
■ CALCULATION NUMBER(S): #54239-JOP1000 AND #54239-JOP1000TS

BILL OF MATERIALS

ITEM	UNIT QTY	QTY	PART NUMBER	DESCRIPTION	MASS (lb)
1	1	1	200093035	Tank JOP 1000 Gallon 6 Inch Assembly 24"E, 24"C, 24"E Single Baffle	14030
2	1	1	200093187	200093220 Plumbing - JOP 1000 Gallon 6 Inch Layout Gravity Grease Interceptor 24"E, 24"C, 24"E Single Baffle	15
3	1	JOB SPECIFIC	100005850	CI RINGCOVER 24DIA B-5105-02/B-5105-R2 ASTM A48 CL35B CP O-RING GASKET OSI JENSEN/INTERCEPT	196
4	1	JOB SPECIFIC	100001524	Grade Ring D2432x3	89
5	1	JOB SPECIFIC	100001525	Grade Ring D2432x6	180
6	1	JOB SPECIFIC	100001526	Grade Ring D2432x12	365
7	1	JOB SPECIFIC	100012046	Plug Cover D2428x6 Slab Top	300

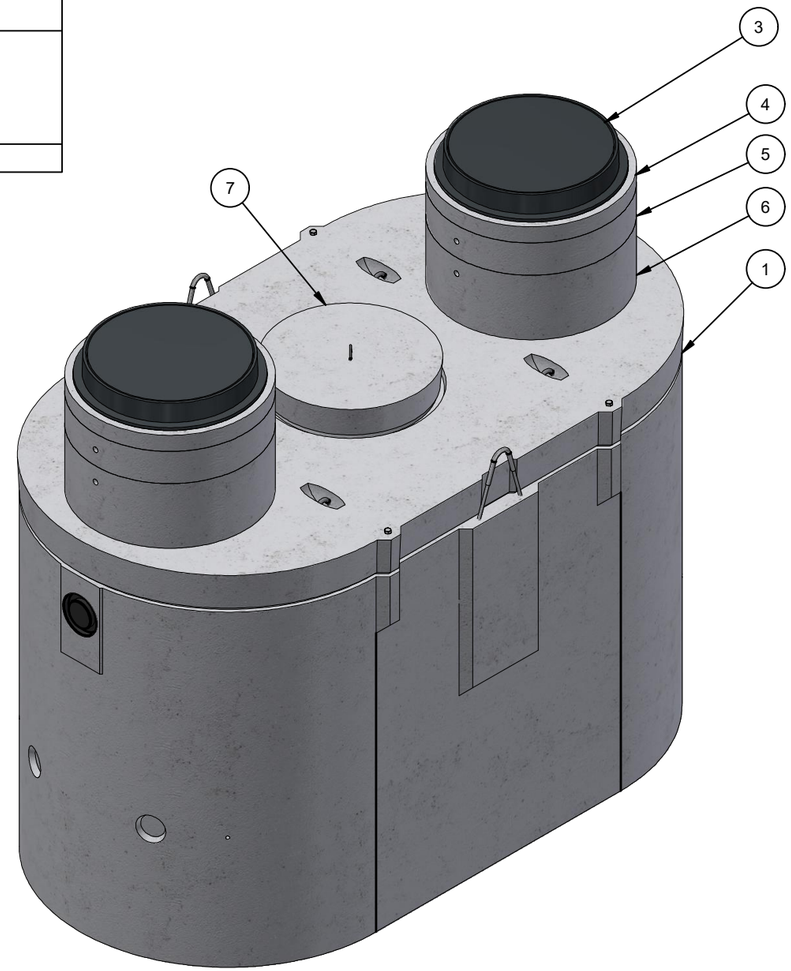

ISO VIEW

MODEL: JOP-1000-ECE-G

CHANGE HISTORY			
NO.	DESCRIPTION	DATE	BY
1	2208-54239	9/5/2024	

BURY DEPTH:	1.1' - 6.0' to Top		
WATER LEVEL:	Below Structure	APPROX. WEIGHT:	13487.16 Lbs
DESIGN SPEC:	ACI 318,ASTM C890	LOADING SPEC:	A-16 (AASHTO HS20-44)
AGENCY:		AGENCY SPEC:	

JENSEN PRECAST EST. 1968

WWW.JENSENPRECAST.COM

©2024 Jensen Precast- All rights reserved.
All materials appearing as Jensen Precast documents and the like are proprietary work product and are protected under U.S. copyright and other laws.
Unless in conjunction with business conducted with Jensen Precast, any use of Jensen Precast work product without express, written consent is prohibited, and recipient is prohibited from distributing any and all work product to non-approved third parties under penalty of civil action.
This product shall only be produced in a Jensen Precast facility.

DESCRIPTION: Tank JOP 1000 Gallon 6 Inch IN-E OUT-E Layout Gravity Grease Interceptor 24"E, 24"C, 24"E Single Baffle LAYOUT REVIEW			REV: A
PART NUMBER:	200093220	DRAWN BY: B. Evans	SHEET: 1 OF 2
CREATED:	9/5/2024	MODIFIED:	9/10/2024

200093220.idw

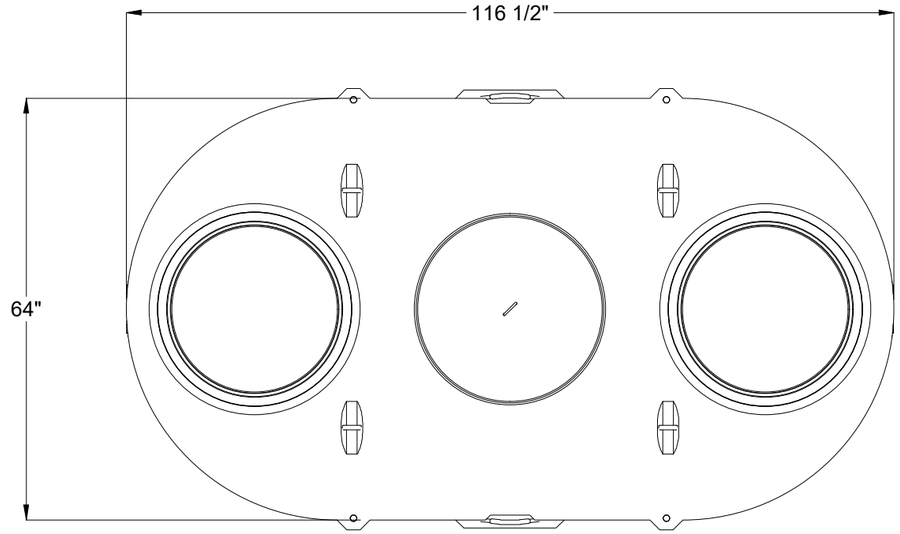

PLAN VIEW

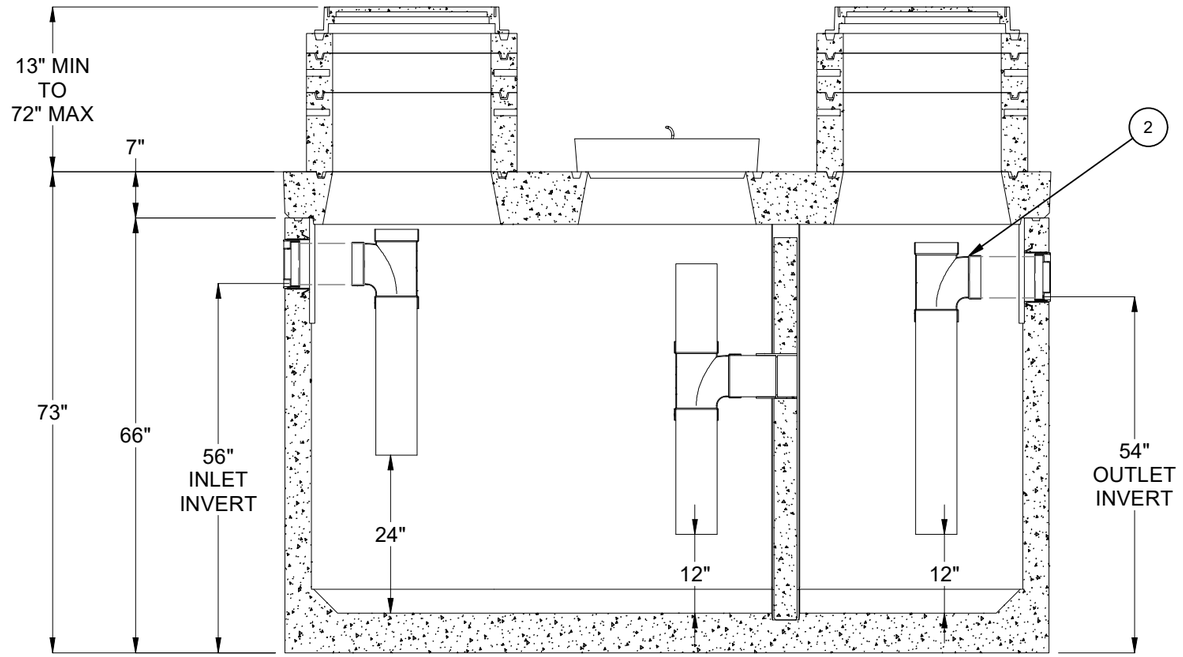

CROSS SECTION

BURY DEPTH:	1.1' - 6.0' to Top		
WATER LEVEL:	Below Structure	APPROX. WEIGHT:	13487.16 Lbs
DESIGN SPEC:	ACI 318,ASTM C890	LOADING SPEC:	A-16 (AASHTO HS20-44)
AGENCY:		AGENCY SPEC:	

JENSEN PRECAST EST. 1968

WWW.JENSENPRECAST.COM

©2024 Jensen Precast- All rights reserved.
All materials appearing as Jensen Precast documents and the like are proprietary work product and are protected under U.S. copyright and other laws.
Unless in conjunction with business conducted with Jensen Precast, any use of Jensen Precast work product without express, written consent is prohibited, and recipient is prohibited from distributing any and all work product to non-approved third parties under penalty of civil action.
This product shall only be produced in a Jensen Precast facility.

DESCRIPTION:
Tank JOP 1000 Gallon 6 Inch IN-E OUT-E Layout Gravity Grease Interceptor 24"E, 24"C, 24"E Single Baffle
LAYOUT DRAWING

PART NUMBER:	200093220	DRAWN BY:	B. Evans
CREATED:	9/5/2024	MODIFIED:	9/10/2024

REV: A

SHEET: 2 OF 2

200093220.idw