DESIGN NOTES:

- CONCRETE SHALL HAVE A 28 DAY MINIMUM COMPRESSIVE STRENGTH OF 5000 PSI
- SOIL UNIT WEIGHT DRY - 110 lbs/cu.ft.
- EQUIVALENT LATERAL PRESSURE DRY - 40 lbs/cu.ft.
- SOIL UNIT WEIGHT WET - 120 lbs/cu.ft.
- EQUIVALENT LATERAL PRESSURE WET - 80 lbs/cu.ft.

PRODUCTION NOTES:

- THIS PRODUCT SHALL ONLY BE PRODUCED IN A JENSEN PRECAST FACILITY
- LIFTING INSERTS SHALL BE INSTALLED PER MANUFACTURER'S REQUIREMENTS
- APPLIED FINISH - NONE
- INTERNAL LINER/COATING - NONE
- EXTERNAL LINER/COATING - NONE

BILL OF MATERIALS

ITEM	UNIT QTY	QTY	PART NUMBER	DESCRIPTION
1	20.827 ft^3	20.827 ft^3	100011425	CONCRETE MIX GENERIC 5000 PSI
2	1	8	100002867	ANCHOR DOGBONE P52 2T X 3-3/8" GALV
3	1	4	100005910	PULL IRON CABLE 9X27 MB BPI-1
4	24.000 in	144.000 in	100024617	STRUT C-CHANNEL CONCRETE INSERT 1-5/8 X 1-3/8 12GA W/ANCHORS GALV
5	1	8	100003011	TERMINATOR DUCT WITH SEAL 3IN SHORT T3000
6	1	8	100003015	TERMINATOR DUCT WITH SEAL 4.5IN T4501
7	1	1	200092724	REINFORCING MAT 200092724

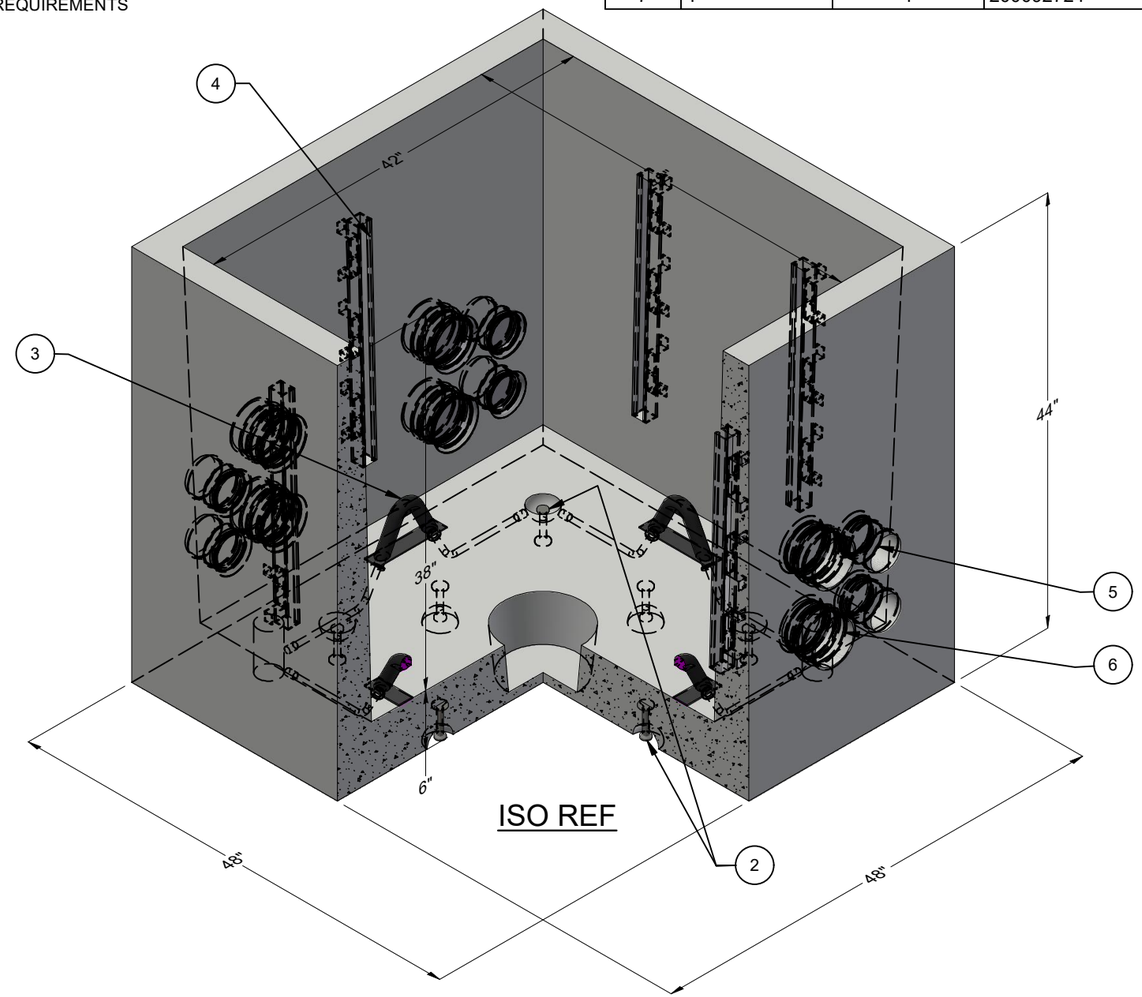

ISO REF

200092723.idw

LIFTING NOTES

■ THIS CONCRETE PRODUCT IS DESIGNED TO BE LIFTED AT 2500 PSI WITH 4 LIFT CONNECTIONS EQUALLY LOADED TO 2 LIFTING POINTS AT A MINIMUM 60° SLING ANGLE, MEASURED FROM HORIZONTAL.

*All rigging shall be design by a qualified professional. Loading diagrams show illustrations of possible rigging setups to achieve the required sling angle and load leg equalization. Other valid rigging configurations are possible. A qualified professional must be consulted prior to lifting.

RIGGING DIAGRAM* | B

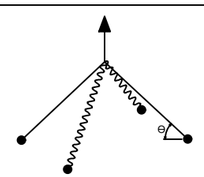

BURY DEPTH:	0.7' - 2.8' to Top		
WATER LEVEL:	Below Structure	APPROX. WEIGHT:	3185.32 Lbs
DESIGN SPEC:	ACI 318,ASTM C857	LOADING SPEC:	A-16 (AASHTO HS20-44)
REINFORCEMENT TYPE:	Rebar	LIFTING TYPE:	Dogbone

JENSEN PRECAST EST. 1968

WWW.JENSENPRECAST.COM

©2024 Jensen Precast- All rights reserved.
All materials appearing as Jensen Precast documents and the like are proprietary work product and are protected under U.S. copyright and other laws.
Unless in conjunction with business conducted with Jensen Precast, any use of Jensen Precast work product without express, written consent is prohibited, and recipient is prohibited from distributing any and all work product to non-approved third parties under penalty of civil action.
This product shall only be produced in a Jensen Precast facility.

CHANGE HISTORY

NO.	DESCRIPTION	DATE	BY
1	2408-57538	9-3-24	JW

DESCRIPTION: Vault 4242x38 Rect. Bottom Section Terminators Sump,Racking MCDOT 4806-1

CASTING LAYOUT

REV: A-2

PART NUMBER:	200092723	DRAWN BY:	MLR
CREATED:	8/22/2024	MODIFIED:	9/3/2024

SHEET: 1 OF 2

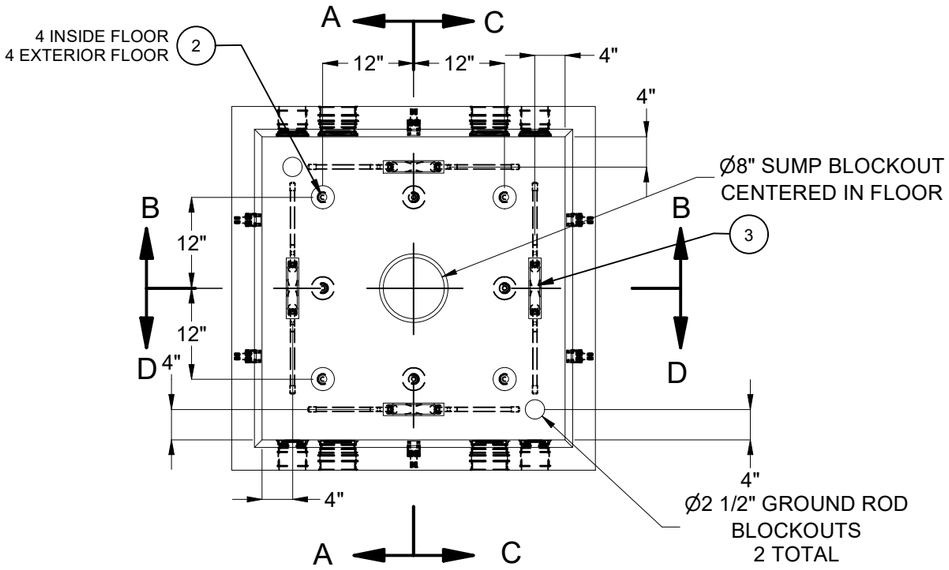

PLAN VIEW

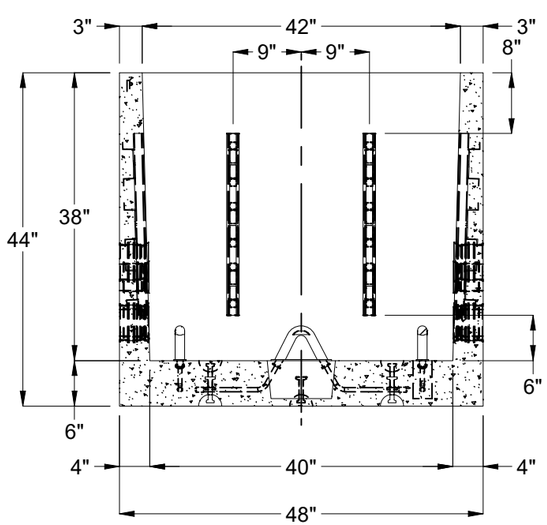

SECTION A-A

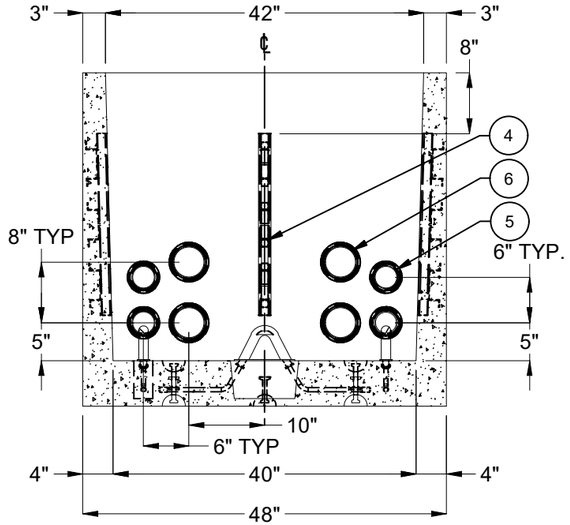

SECTION B-B

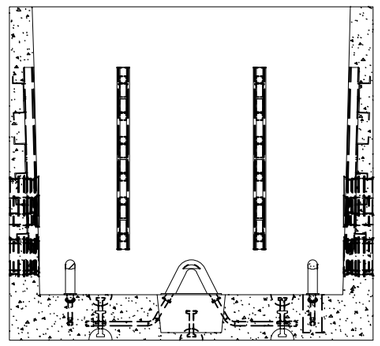

SECTION C-C

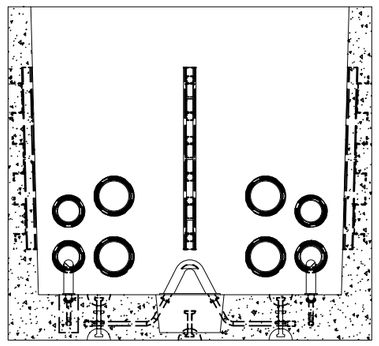

SECTION D-D

BURY DEPTH:	0.7' - 2.8' to Top		
WATER LEVEL:	Below Structure	APPROX. WEIGHT:	3185.32 Lbs
DESIGN SPEC:	ACI 318,ASTM C857	LOADING SPEC:	A-16 (AASHTO HS20-44)
REINFORCEMENT TYPE:	Rebar	LIFTING TYPE:	Dogbone

JENSEN PRECAST EST. 1968

WWW.JENSENPRECAST.COM

©2024 Jensen Precast- All rights reserved.
All materials appearing as Jensen Precast documents and the like are proprietary work product and are protected under U.S. copyright and other laws.
Unless in conjunction with business conducted with Jensen Precast, any use of Jensen Precast work product without express, written consent is prohibited, and recipient is prohibited from distributing any and all work product to non-approved third parties under penalty of civil action.
This product shall only be produced in a Jensen Precast facility.

DESCRIPTION:
Vault 4242x38 Rect. Bottom Section Terminators Sump,Racking MCDOT 4806-1
CASTING DRAWING

REV: A-2

PART NUMBER:	200092723	DRAWN BY:	MLR
CREATED:	8/22/2024	MODIFIED:	9/3/2024

SHEET: 2 OF 2

200092723.idw