BILL OF MATERIALS

ITEM	UNIT QTY	QTY	PART NUMBER	DESCRIPTION
1	*Varies*	43.500 in	100002511	PIPE PVC 6IN DIA SDR35 ASTM D-3034 SOLVENT WELD SEWER DRAIN
2	*Varies*	64.000 in	100002510	PIPE PVC 4IN DIA SDR35 ASTM D-3034 SOLVENT WELD SEWER DRAIN
3	1	2	100002697	PIPE FITTING PVC SDR35 SAN TEE 4DIA
4	1	1	100002698	PIPE FITTING PVC SDR35 SAN TEE 6DIA

200092406.idw

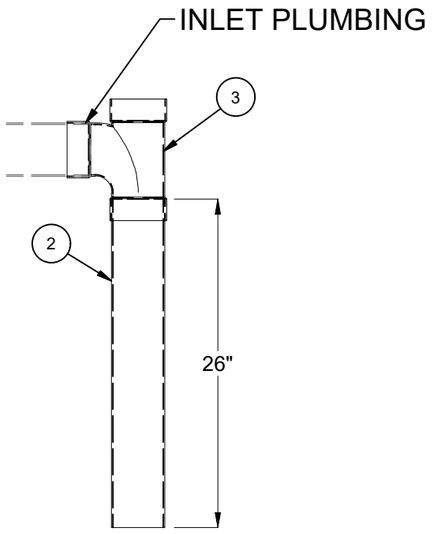

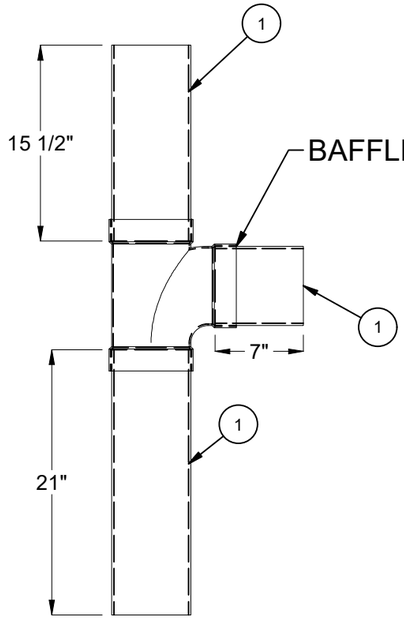

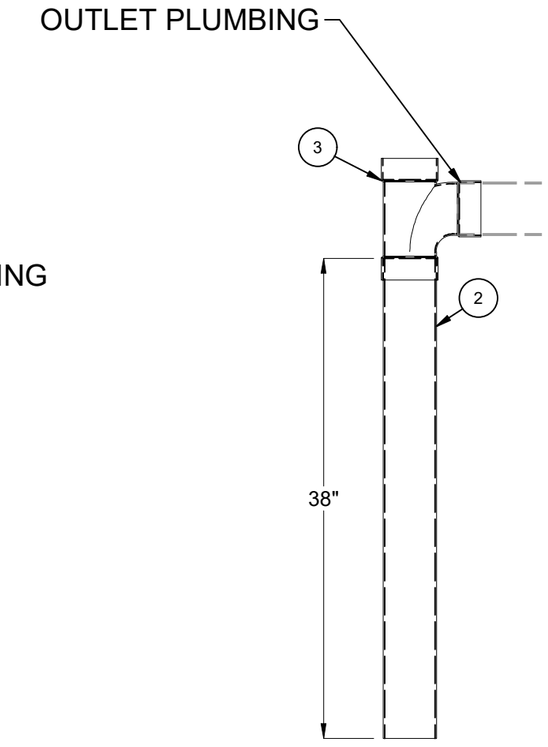

ELEVATION VIEW

CHANGE HISTORY			
NO.	DESCRIPTION	DATE	BY
1	2208-54239	8/13/2024	

BURY DEPTH:	to		
WATER LEVEL:	APPROX. WEIGHT:	8.86 Lbs	
DESIGN SPEC:	LOADING SPEC:		
REINFORCEMENT TYPE:	LIFTING TYPE:		

JENSEN PRECAST EST. 1968

WWW.JENSENPRECAST.COM

©2024 Jensen Precast- All rights reserved.
All materials appearing as Jensen Precast documents and the like are proprietary work product and are protected under U.S. copyright and other laws.
Unless in conjunction with business conducted with Jensen Precast, any use of Jensen Precast work product without express, written consent is prohibited, and recipient is prohibited from distributing any and all work product to non-approved third parties under penalty of civil action.
This product shall only be produced in a Jensen Precast facility.

DESCRIPTION:
200092397 Plumbing - JOP 2000 Gallon 4 Inch Layout Gravity Grease Interceptor 24"E, 24"B, 24"E Single Baffle
CASTING LAYOUT

REV: A-1

PART NUMBER:	200092406	DRAWN BY:	B. Evans
CREATED:	8/13/2024	MODIFIED:	8/15/2024

SHEET: 1 OF 1