DESIGN NOTES:

- CONCRETE SHALL HAVE A 28 DAY MINIMUM COMPRESSIVE STRENGTH OF 6500 PSI

PRODUCTION NOTES:

- THIS PRODUCT SHALL ONLY BE PRODUCED IN A JENSEN PRECAST FACILITY

DESIGN CONTAINS PROPRIETARY INFORMATION
DETAIL NOT TO BE SHARED OUTSIDE OF JENSEN PRECAST

BILL OF MATERIALS

ITEM	UNIT QTY	QTY	PART NUMBER	DESCRIPTION
1	0.316 ft^3	0.316 ft^3	100011428	CONCRETE MIX GENERIC 6500 PSI

200092395.idw

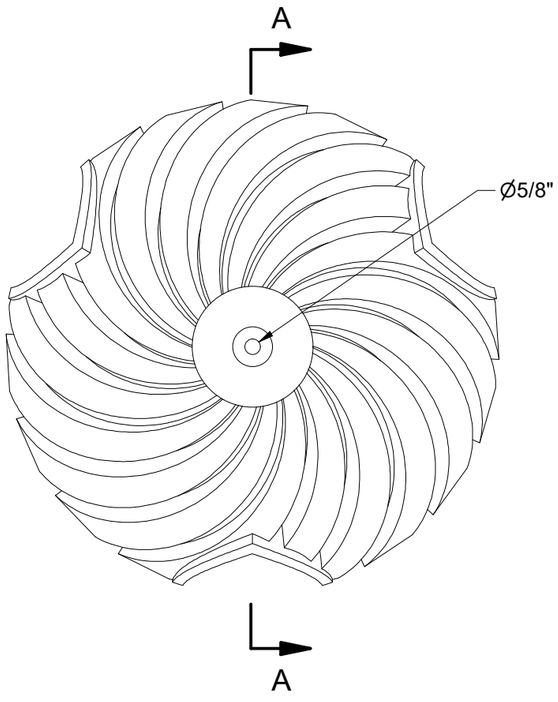

PLAN VIEW

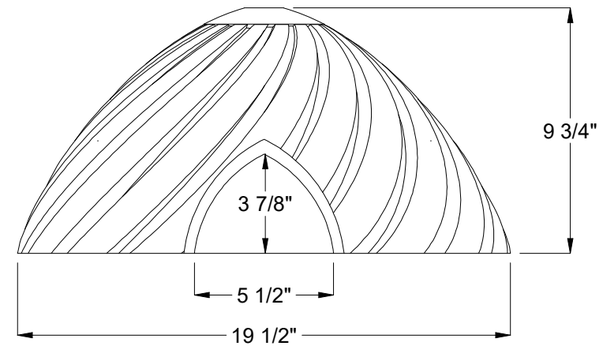

SIDE VIEW

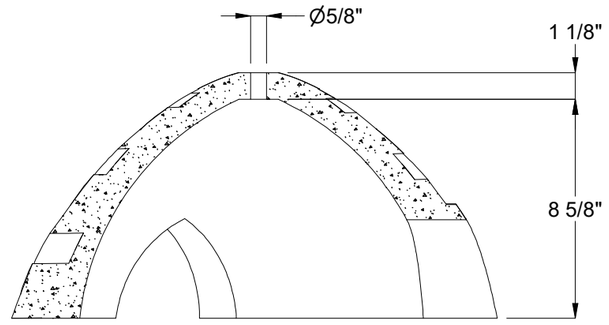

SECTION A-A

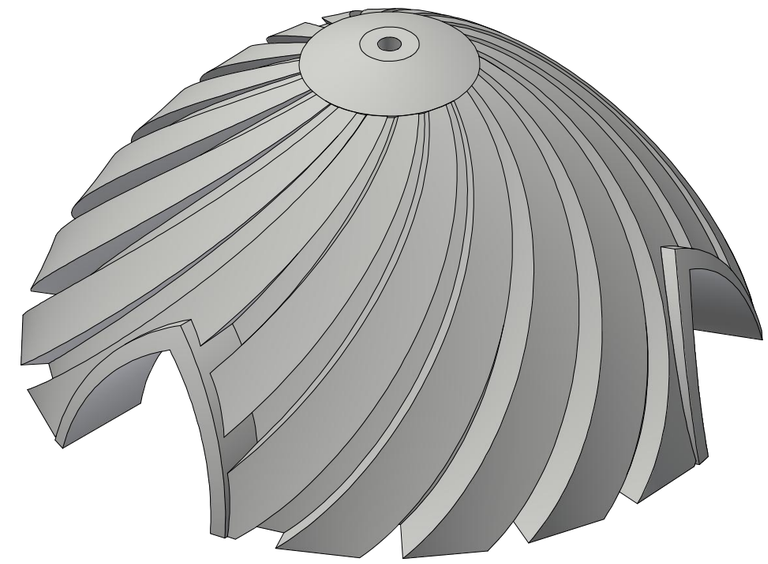

ISO VIEW

CHANGE HISTORY			
NO.	DESCRIPTION	DATE	BY
1	PRELIMINARY SUBMITTAL	8/14/2024	BCM
2			
3			

BURY DEPTH:	N/A to N/A		
WATER LEVEL:	N/A	APPROX. WEIGHT:	47.46 Lbs
DESIGN SPEC:	N/A	LOADING SPEC:	N/A
REINFORCEMENT TYPE:	None	LIFTING TYPE:	None

JENSEN PRECAST EST. 1968
WWW.JENSENPRECAST.COM

©2024 Jensen Precast- All rights reserved.
All materials appearing as Jensen Precast documents and the like are proprietary work product and are protected under U.S. copyright and other laws.
Unless in conjunction with business conducted with Jensen Precast, any use of Jensen Precast work product without express, written consent is prohibited, and recipient is prohibited from distributing any and all work product to non-approved third parties under penalty of civil action.
This product shall only be produced in a Jensen Precast facility.

DESCRIPTION:	Dome D19.5 x 9.75 Coral Reef Superdome CASTING LAYOUT		REV: A-2
PART NUMBER:	200092395	DRAWN BY:	B. McConnell
CREATED:	8/14/2024	MODIFIED:	8/14/2024
			SHEET: 1 OF 1