NOTES
■ FOR COMPLETE DESIGN AND PRODUCT INFORMATION CONTACT JENSEN PRECAST.

BILL OF MATERIALS

ITEM	QTY	PART NUMBER	DESCRIPTION
1	11.137 ft^3	100011425	CONCRETE MIX GENERIC 5000 PSI
2	3	100002867	ANCHOR DOGBONE P52 2T X 3-3/8" GALV
3	1	300156463	REINFORCING MAT 300156463
4	1	300156464	REINFORCING MAT 300156464

200091645.idw

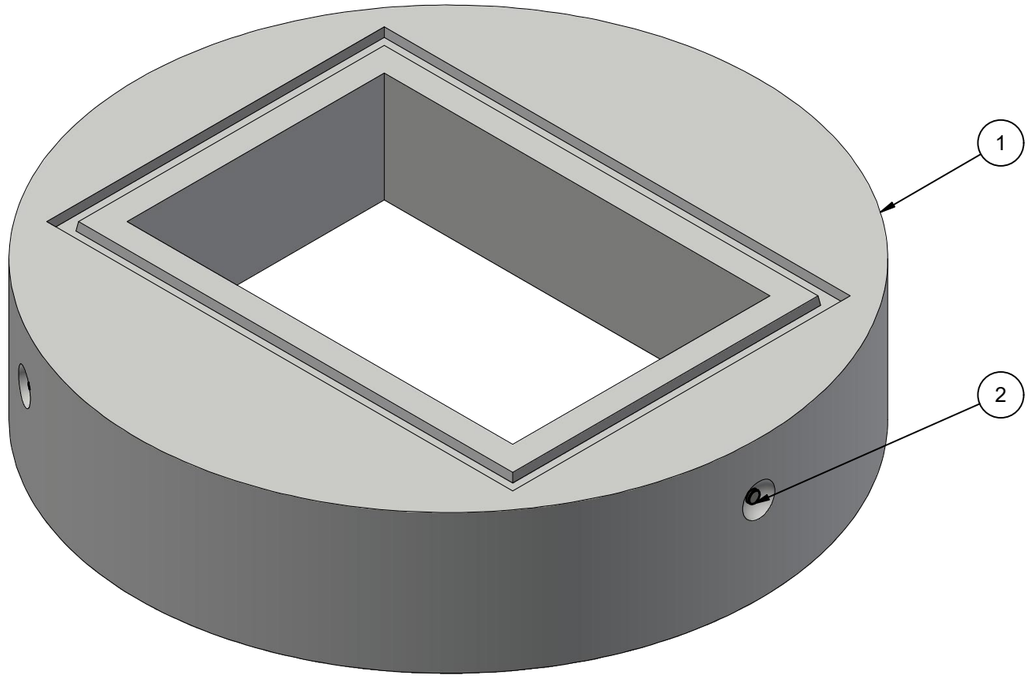

ISOMETRIC VIEW

LIFTING NOTES
■ THIS CONCRETE PRODUCT IS DESIGNED TO BE LIFTED AT 2500 PSI WITH 3 LIFT CONNECTIONS EQUALLY LOADED TO 3 LIFTING POINTS AT A MINIMUM 60° SLING ANGLE, MEASURED FROM HORIZONTAL.
*All rigging shall be design by a qualified professional. Loading diagrams show illustrations of possible rigging setups to achieve the required sling angle and load leg equalization. Other valid rigging configurations are possible. A qualified professional must be consulted prior to lifting.

RIGGING DIAGRAM*	A

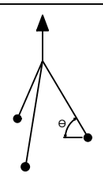

BURY DEPTH:	0.7' - 2.0' to Top		
WATER LEVEL:	Below Structure	APPROX. WEIGHT:	1674.93 Lbs
DESIGN SPEC:	ACI 318,ASTM C890	LOADING SPEC:	A-16 (AASHTO HS20-44)
REINFORCEMENT TYPE:	Rebar	LIFTING TYPE:	Dogbone

JENSEN PRECAST EST. 1968

WWW.JENSENPRECAST.COM

©2024 Jensen Precast- All rights reserved.
All materials appearing as Jensen Precast documents and the like are proprietary work product and are protected under U.S. copyright and other laws.
Unless in conjunction with business conducted with Jensen Precast, any use of Jensen Precast work product without express, written consent is prohibited, and recipient is prohibited from distributing any and all work product to non-approved third parties under penalty of civil action.

CHANGE HISTORY			
NO.	DESCRIPTION	DATE	BY
A	DRAWING CREATED	7/30/2024	EF

DESCRIPTION: Manhole D4858x13 Flat Top 24"x36"C CASTING LAYOUT				REV: A-1
PART NUMBER:	200091645	DRAWN BY:	E.Fine	SHEET: 1 OF 2
CREATED:	7/30/2024	MODIFIED:	8/7/2024	

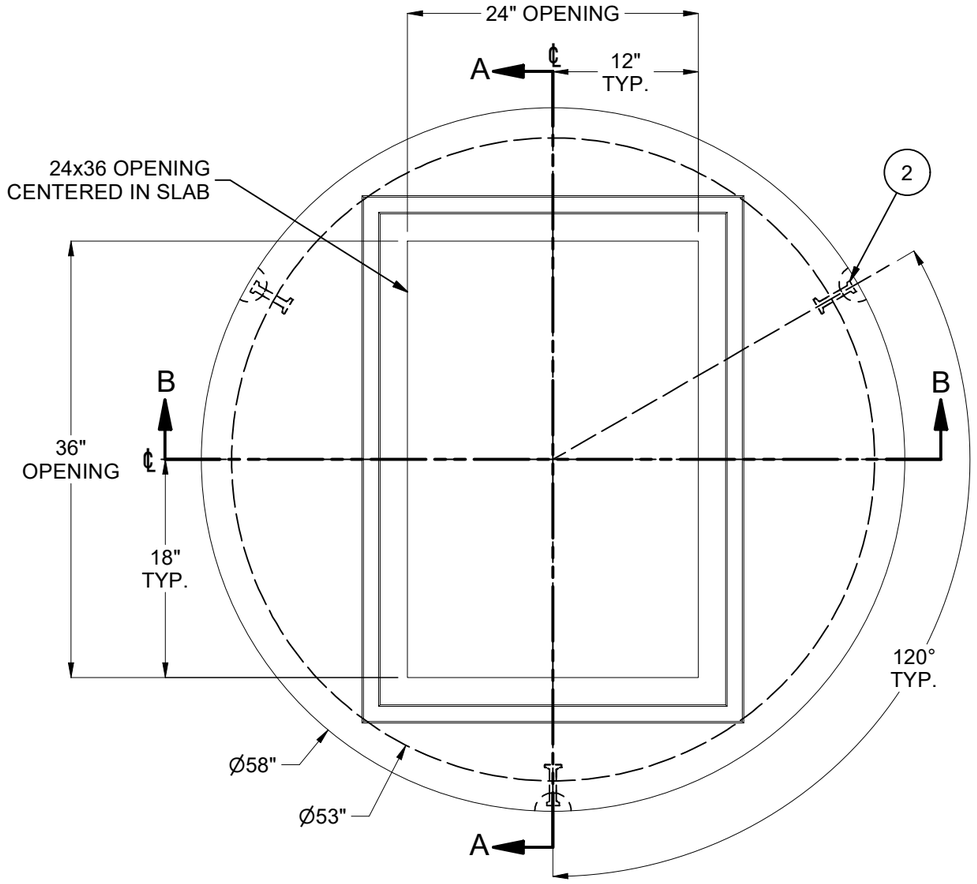

PLAN VIEW

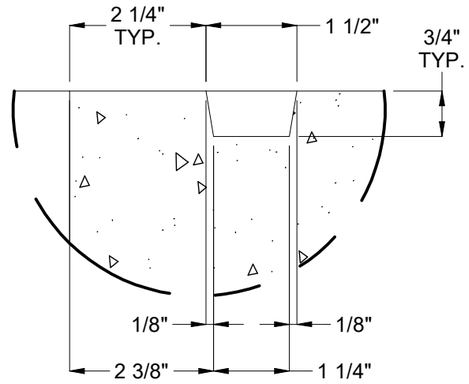

JOINT DETAIL

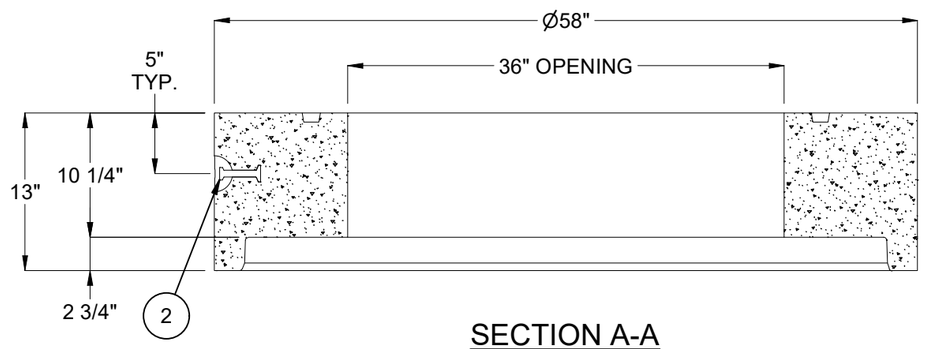

SECTION A-A

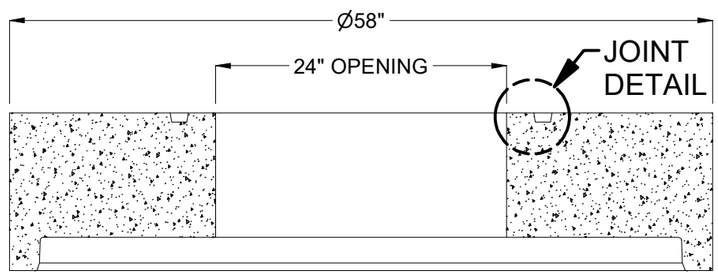

SECTION B-B

BURY DEPTH:	0.7' - 2.0' to Top		
WATER LEVEL:	Below Structure	APPROX. WEIGHT:	1674.93 Lbs
DESIGN SPEC:	ACI 318,ASTM C890	LOADING SPEC:	A-16 (AASHTO HS20-44)
REINFORCEMENT TYPE:	Rebar	LIFTING TYPE:	Dogbone

JENSEN PRECAST EST. 1968

WWW.JENSENPRECAST.COM

©2024 Jensen Precast- All rights reserved.
All materials appearing as Jensen Precast documents and the like are proprietary work product and are protected under U.S. copyright and other laws.
Unless in conjunction with business conducted with Jensen Precast, any use of Jensen Precast work product without express, written consent is prohibited, and recipient is prohibited from distributing any and all work product to non-approved third parties under penalty of civil action.

DESCRIPTION:	Manhole D4858x13 Flat Top 24"x36"C CASTING DRAWING		REV: A-1
PART NUMBER:	200091645	DRAWN BY:	E.Fine
CREATED:	7/30/2024	MODIFIED:	8/7/2024
			SHEET: 2 OF 2

200091645.idw