DESIGN NOTES:

- CONCRETE SHALL HAVE A 28 DAY MINIMUM COMPRESSIVE STRENGTH OF 9000 PSI
- D-LOAD TO PRODUCE A 0.01-IN CRACK: 2000lbs/ft/ft
- INNER CIRCUMFERENTIAL REINFORCING SHALL HAVE 1.5 INCH OF CONCRETE COVER
- OUTER CIRCUMFERENTIAL REINFORCING SHALL HAVE 1 INCH OF CONCRETE COVER

PRODUCTION NOTES:

- THIS PRODUCT SHALL ONLY BE PRODUCED IN A JENSEN PRECAST FACILITY
- LIFTING INSERTS SHALL BE INSTALLED PER MANUFACTURER'S REQUIREMENTS

BILL OF MATERIALS

ITEM	QTY	PART NUMBER	DESCRIPTION
1	164.400 ft^3	100045537	CONCRETE MIX GENERIC 9000 PSI
2	3	100002880	ANCHOR DOGBONE P52 8T X 6-3/4" GALV
3	1	200091547	RCP CAGE P96B Class 4 Bell-Spigot 96L 1.5" CLR-OUTER
4	1	200091550	RCP CAGE P96B Class 4 Bell-Spigot 96L 1.5" CLR-INNER

ALTERNATE REINFORCING OPTION

PART NUMBER	DESCRIPTION
200092392	RCP Cage P96B Class 4 Bell - Spigot 96L 1.5" CLR - INNER - REBAR
200092394	RCP Cage P96B Class 4 Bell - Spigot 96L 1.5" CLR - OUTER - REBAR

200091546.idw

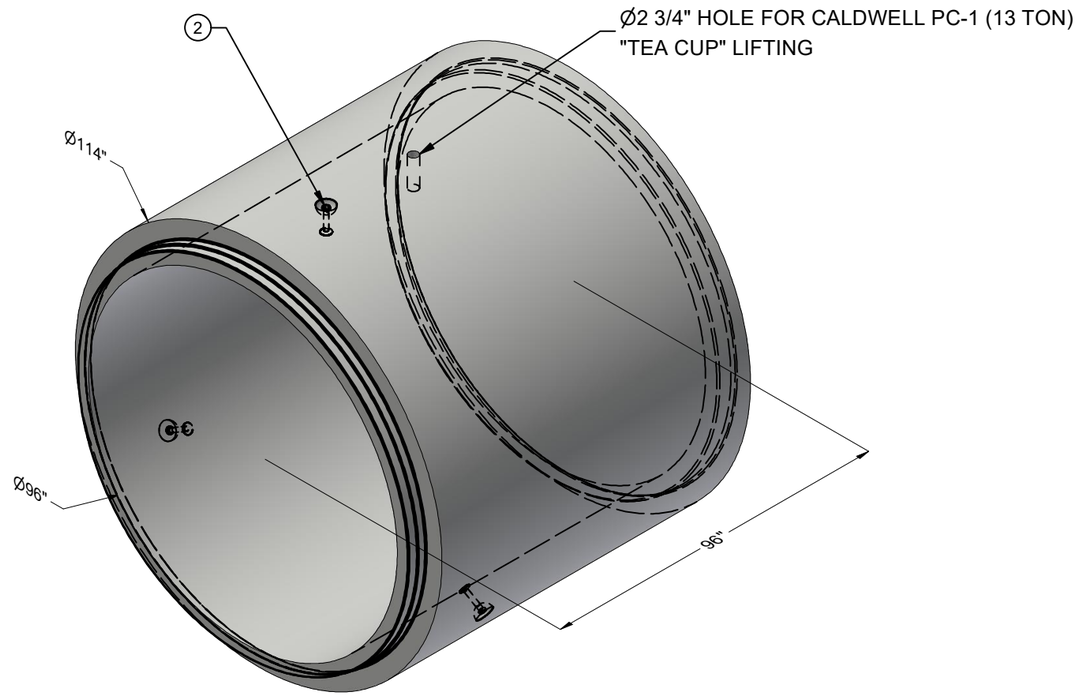

ISO VIEW

LIFTING NOTES
■ INSTALLATION: THIS CONCRETE PRODUCT IS DESIGNED TO BE LIFTED AT 5000 PSI WITH 1 LIFT CONNECTIONS EQUALLY LOADED TO 1 LIFTING POINTS AT A MINIMUM 90° SLING ANGLE, MEASURED FROM HORIZONTAL.
■ DEMOLDING: THIS CONCRETE PRODUCT IS DESIGNED TO BE LIFTED AT 2500 PSI WITH 3 LIFT CONNECTIONS EQUALLY LOADED TO 3 LIFTING POINTS AT A MINIMUM 60° SLING ANGLE, MEASURED FROM HORIZONTAL.
*All rigging shall be design by a qualified professional. Loading diagrams show illustrations of possible rigging setups to achieve the required sling angle and load leg equalization. Other valid rigging configurations are possible. A qualified professional must be consulted prior to lifting.

RIGGING DIAGRAMS*

INSTALLATION	M	DEMOLDING	A
		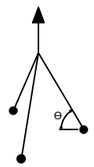	

BURY DEPTH:	to		
WATER LEVEL:		WEIGHT:	24714.61 Lbs
DESIGN SPEC:	ASTM C76	LOADING SPEC:	Class 4
REINFORCEMENT TYPE:	WWR Plain	LIFTING TYPE:	Dogbone

JENSEN PRECAST EST. 1968

WWW.JENSENPRECAST.COM

©2019 Jensen Precast- All rights reserved.
All materials appearing as Jensen Precast documents and the like are proprietary work product and are protected under U.S. copyright and other laws.
Unless in conjunction with business conducted with Jensen Precast, any use of Jensen Precast work product without express, written consent is prohibited, and recipient is prohibited from distributing any and all work product to non-approved third parties under penalty of civil action.

REVISION HISTORY

REV	DESCRIPTION	DATE	BY
A	2302-54877	2/16/2023	DCH
A-1	ADDED ALT REINFORCING OPTION	8/15/2024	RR

DESCRIPTION:	RCP P96B Class 4 Bell - Spigot 96L 1.5" CLR CASTING LAYOUT		REV: A-1
PART NUMBER:	200091546	DRAWN BY:	B. Evans
CREATED:	7/25/2024	MODIFIED:	8/15/2024
			SHEET: 1 OF 2

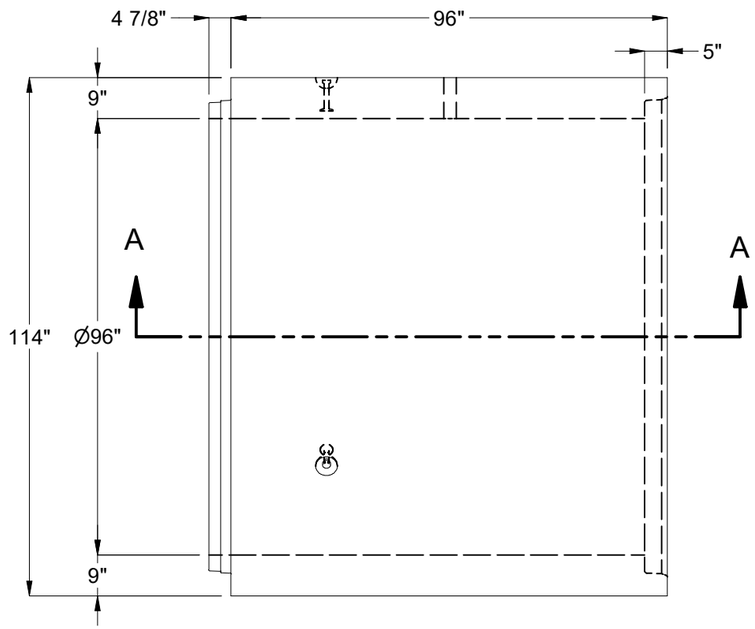

SIDE VIEW

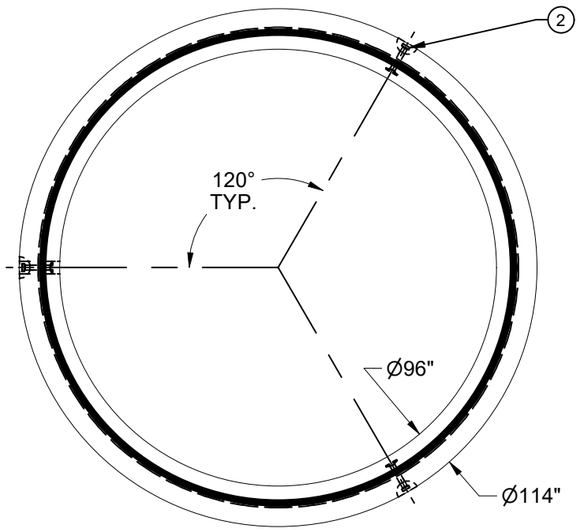

TONGUE END VIEW

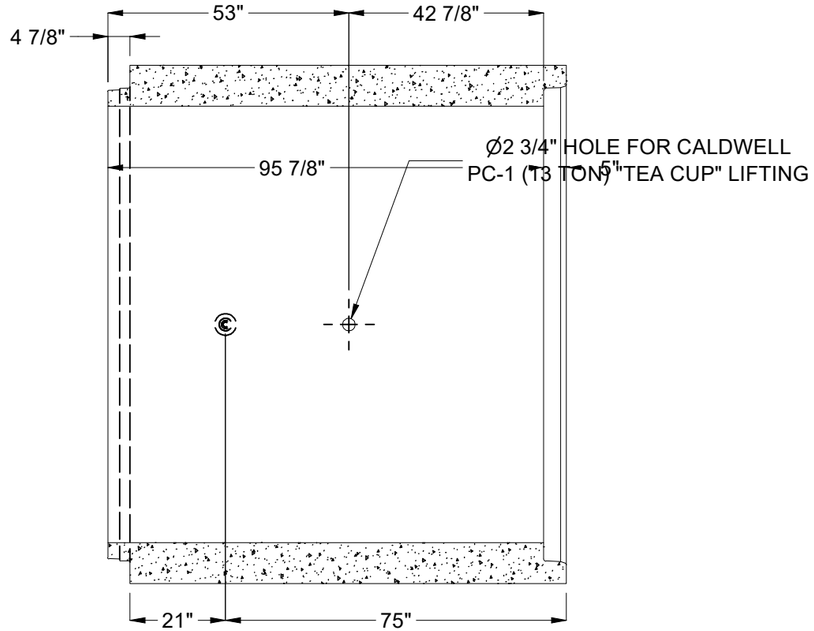

SECTION A-A

D96114- QUINN 7R 96MHX 9" WALL JOINT

BURY DEPTH:	to		
WATER LEVEL:		WEIGHT:	24714.61 Lbs
DESIGN SPEC:	ASTM C76	LOADING SPEC:	Class 4
REINFORCEMENT TYPE:	WWR Plain	LIFTING TYPE:	Dogbone

JENSEN PRECAST EST. 1968

WWW.JENSENPRECAST.COM

©2019 Jensen Precast- All rights reserved.
All materials appearing as Jensen Precast documents and the like are proprietary work product and are protected under U.S. copyright and other laws.
Unless in conjunction with business conducted with Jensen Precast, any use of Jensen Precast work product without express, written consent is prohibited, and recipient is prohibited from distributing any and all work product to non-approved third parties under penalty of civil action.

DESCRIPTION:	RCP P96B Class 4 Bell - Spigot 96L 1.5" CLR CASTING DRAWING		REV: A-1
PART NUMBER:	200091546	DRAWN BY:	B. Evans
CREATED:	7/25/2024	MODIFIED:	8/15/2024
			SHEET: 2 OF 2

200091546.idw