DESIGN NOTES
■ DESIGNED IN ACCORDANCE WITH AASHTO HS20-44 TRAFFIC BRIDGE LOADING USING 5,500 PSI COMPRESSIVE STRENGTH CONCRETE AND 60,000 PSI YIELD STRENGTH ASTM A-706 STEEL REINFORCEMENT PER CALCS. #33827.
■ COVER DESIGNED FOR 16,000 LB LOAD ON 10" X 20" FOOTPRINT, WITH 30% IMPACT RESTRICTED TO UNRESTRICTED PARKING LANES AND ALLEYWAYS WHERE TRAFFIC SPEED IS LIMITED TO 15 MILES PER HOUR. (ASTM LOAD LEVEL 5)
■ MINIMUM EXCAVATION SIZE: 4'-9" X 6'-9" X DEPTH REQ'D.
■ INTERCEPT BOX DESIGNED FOR MAXIMUM 8'-0" HEIGHT.
■ VAULT TO BE PLACED ON A MIN. 6" BASE OF CRUSHER RUN FOR EASE OF INSTALLATION AND EVEN LOAD DISTRIBUTION.
■ FINISH COATING: ALL INTERIOR WALLS SHALL BE PAINTED WHITE.
■ ALL PARTS TO BE STENCILED: MFG DATE / JOB NUMBER / PRODUCT ID / WEIGHT.
■ FOR COMPLETE DESIGN AND PRODUCT INFORMATION CONTACT JENSEN PRECAST.

DESCRIPTION	AT&T OIN#	JENSEN PART#
3'x5'x4' INTERCEPT PULL BOX, NON-SLIP, TRAFFIC, TORSION, HINGED	100061956	200090883
*OPTIONAL RISERS		
6" RISER SECTION	100061963	100012178
12" RISER SECTION	100061964	100012177

BILL OF MATERIALS

ITEM	UNIT QTY	QTY	PART NUMBER	DESCRIPTION	MASS (lb)
1	1	1	100012243	Intercept 3660x5 Slab Bottom Sump AT&T	1610
2	1	1	100012245	Intercept Riser 3660x40 Knockout AT&T	2866
3	1	1	200090884	Top Riser 3660x9 Cast-In Cover	1012
4	1	1	100006738	NAME PLATE SS - AT&T	
5	1	4	100002529	CABLE RACK 24 HOLE GALV W/O TABS	
6	1	8	100022504	HEX BOLT, TAP, 1/2-13 UNC 2.5 ZINC	
7	1.000 gal	1.000 gal	100006420	COATING PAINT LATEX WHITE	
8	1.000 ul	1.000 ul	100005749	SEALANT JOINT BUTYL RUBBER ASTM C-990 AND M198 CS-102 1IN EQUIV X14.5FT PER BOX 118FT	

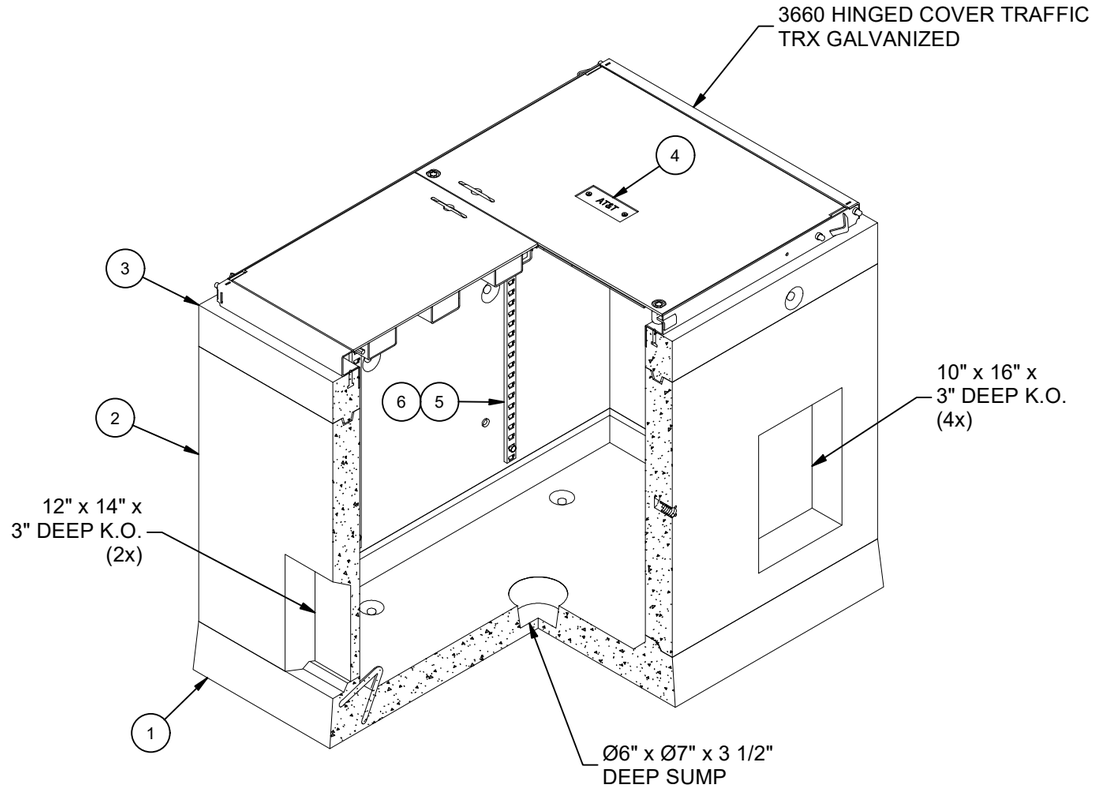

ISOMETRIC VIEW

LIFTING NOTES
■ FIELD INSTALLATION: PLANT DEMOLDING: MINIMUM HANDLING CONCRETE STRENGTH F'c = 5500 PSI RIGGING EQUALIZER REQUIRED TO EQUALIZE LOAD TO 4 LIFTING POINTS WITH A SLING ANGLE BETWEEN 60° AND 90°

REVISION HISTORY			
REV	DESCRIPTION	DATE	APPROVED
C	REMOVED DOGBONES FROM INTERCEPT RISER	8/30/2024	

BURY DEPTH:	0.0' - 0.0' to Top		
WATER LEVEL:	3.0'	APPROX. WEIGHT:	5501.22 Lbs
DESIGN SPEC:	ACI 318,ASTM C857	LOADING SPEC:	A-16 (AASHTO HS20-44)
AGENCY:	AT&T	AGENCY SPEC:	

JENSEN PRECAST EST. 1968

WWW.JENSENPRECAST.COM

©2024 Jensen Precast- All rights reserved.
All materials appearing as Jensen Precast documents and the like are proprietary work product and are protected under U.S. copyright and other laws.
Unless in conjunction with business conducted with Jensen Precast, any use of Jensen Precast work product without express, written consent is prohibited, and recipient is prohibited from distributing any and all work product to non-approved third parties under penalty of civil action.

DESCRIPTION:	Intercept Vault Layout 3660x48 Knockout Sump 36"x60"C AT&T Int. Paint - White Latex Traffic TRX Galvanized LAYOUT REVIEW		REV: C
PART NUMBER:	200090883	DRAWN BY:	D. Mejia
CREATED:	7/10/2024	MODIFIED:	8/30/2024
			SHEET: 1 OF 2

200090883.idw

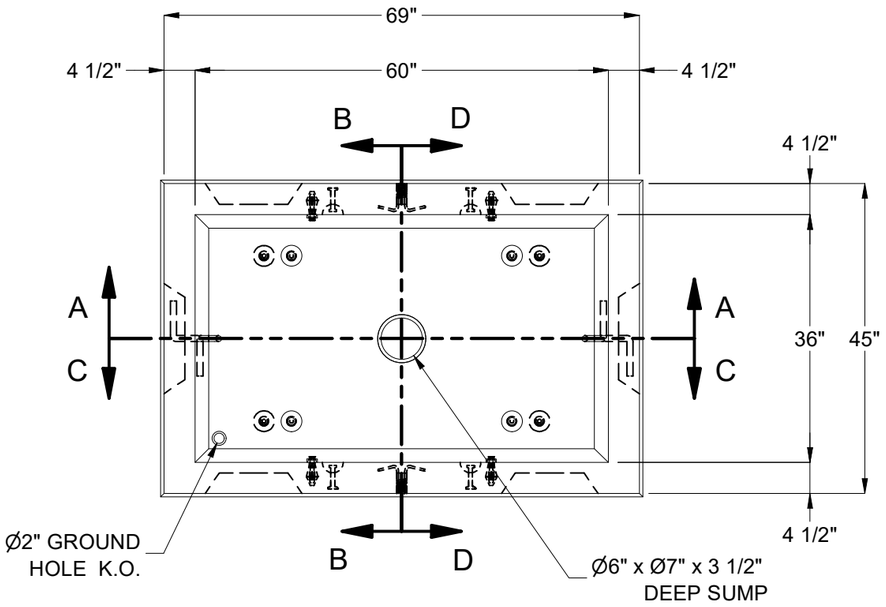

PLAN VIEW W/O TOP SECTION

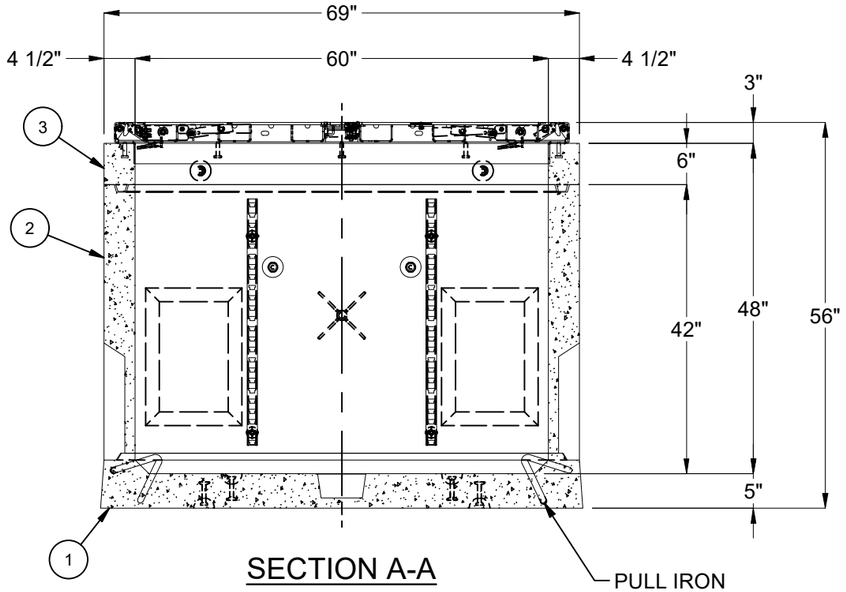

SECTION A-A

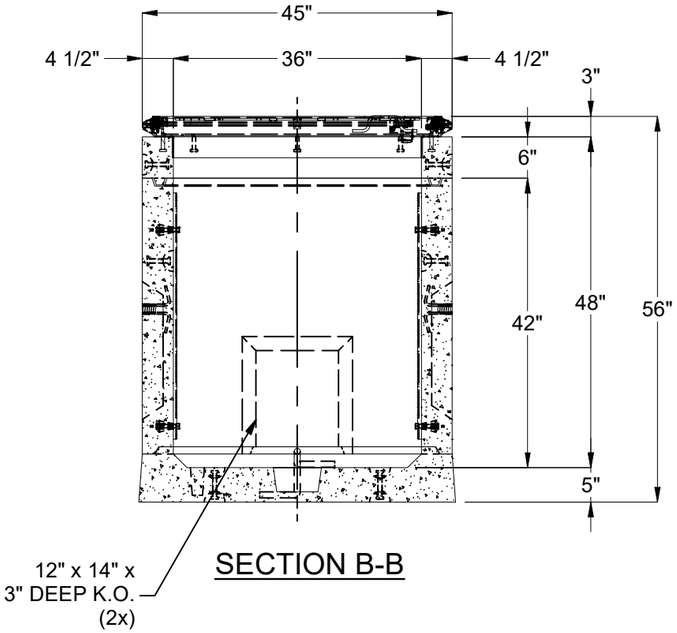

SECTION B-B

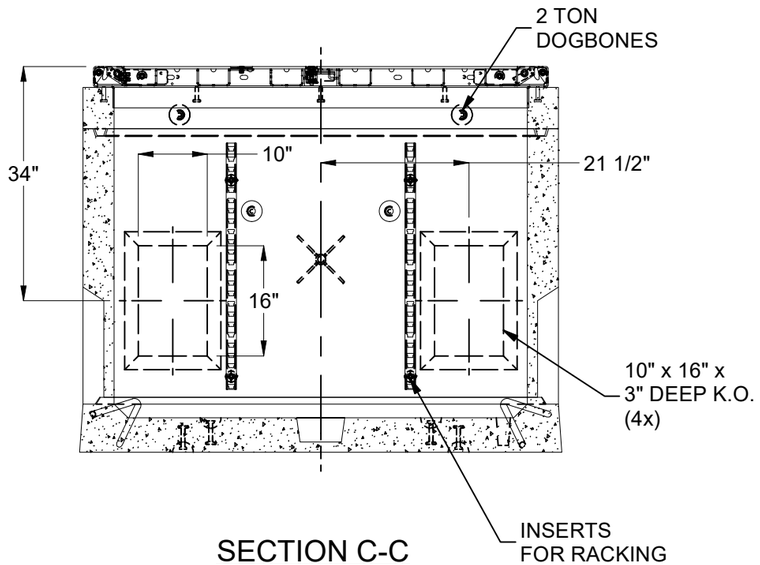

SECTION C-C

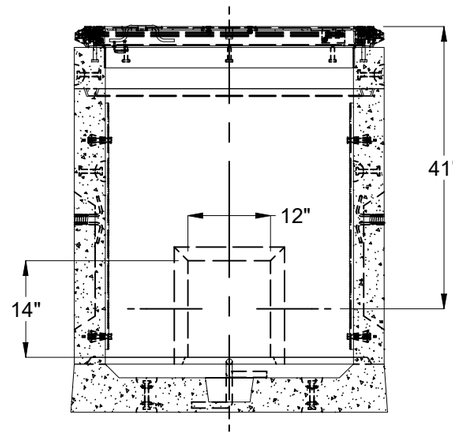

SECTION D-D

BURY DEPTH:	0.0' - 0.0' to Top		
WATER LEVEL:	3.0'	APPROX. WEIGHT:	5501.22 Lbs
DESIGN SPEC:	ACI 318,ASTM C857	LOADING SPEC:	A-16 (AASHTO HS20-44)
AGENCY:	AT&T	AGENCY SPEC:	

JENSEN PRECAST EST. 1968

WWW.JENSENPRECAST.COM

©2024 Jensen Precast- All rights reserved.
All materials appearing as Jensen Precast documents and the like are proprietary work product and are protected under U.S. copyright and other laws.
Unless in conjunction with business conducted with Jensen Precast, any use of Jensen Precast work product without express, written consent is prohibited, and recipient is prohibited from distributing any and all work product to non-approved third parties under penalty of civil action.

DESCRIPTION:	Intercept Vault Layout 3660x48 Knockout Sump 36"x60"C AT&T Int. Paint - White Latex Traffic TRX Galvanized LAYOUT REVIEW		
PART NUMBER:	200090883	DRAWN BY:	D. Mejia
CREATED:	7/10/2024	MODIFIED:	8/30/2024

REV:	C
SHEET:	2 OF 2

200090883.idw