DESIGN NOTES
■ DESIGNED IN ACCORDANCE WITH AASHTO HS20-44 TRAFFIC BRIDGE LOADING USING 5,500 PSI COMPRESSIVE STRENGTH CONCRETE AND 60,000 PSI YIELD STRENGTH ASTM A-706 STEEL REINFORCEMENT PER CALCS. #31435.
■ COVER DESIGNED FOR 16,000 LB LOAD ON 10" X 20" FOOTPRINT, WITH 30% IMPACT RESTRICTED TO UNRESTRICTED PARKING LANES AND ALLEYWAYS WHERE TRAFFIC SPEED IS LIMITED TO 15 MILES PER HOUR. (ASTM LOAD LEVEL 5)
■ MINIMUM EXCAVATION SIZE: 5'-0" X 8'-7" X DEPTH REQ'D.
■ VAULT TO BE PLACED ON A MIN. 6" BASE OF CRUSHER RUN FOR EASE OF INSTALLATION AND EVEN LOAD DISTRIBUTION.
■ ALL PARTS TO BE STENCILED: MFG DATE / JOB NUMBER / PRODUCT ID / WEIGHT.
■ FOR COMPLETE DESIGN AND PRODUCT INFORMATION CONTACT JENSEN PRECAST.

BILL OF MATERIALS

ITEM	UNIT QTY	QTY	PART NUMBER	DESCRIPTION	MASS (lb)
1	1	1	100012332	Intercept 3660x6.75 Slab Bottom Sump Edison	2776
2	1	1	100012325	Intercept Riser 3660x35.5 Knockout Ducted Edison	2991
3	1	1	200090703	Top Riser 3660x6 Cast-In Cover	1067
4	1	1	100007300	NAME PLATE 3X7-1/2 SS - FRONTIER	
5	1	1	100007650	NAME PLATE HARDWARE KIT	
6	1	4	100002527	CABLE RACK 18 HOLE GALV TABS	
7	1	8	100022504	HEX BOLT, TAP, 1/2-13 UNC 2.5 ZINC	
8	1.000 ul	1.000 ul	100005749	SEALANT JOINT BUTYL RUBBER ASTM C-990 AND M198 CS-102 1IN EQUIV X14.5FT PER BOX 118FT	

200090862.idw

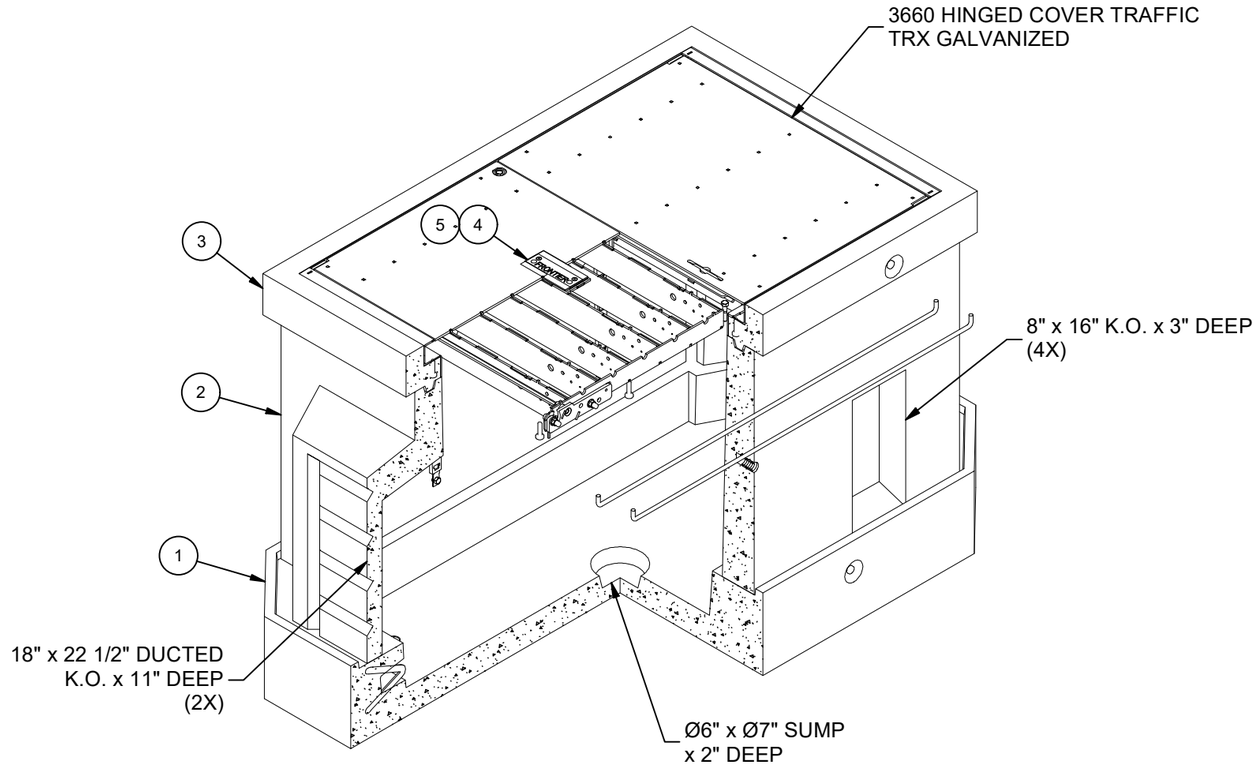

ISOMETRIC VIEW

LIFTING NOTES
■ FIELD INSTALLATION: PLANT DEMOLDING: MINIMUM HANDLING CONCRETE STRENGTH F'c = 5500 PSI RIGGING EQUALIZER REQUIRED TO EQUALIZE LOAD TO 4 LIFTING POINTS WITH A SLING ANGLE BETWEEN 60° AND 90°

REVISION HISTORY			
REV	DESCRIPTION	DATE	APPROVED
A-1	INITIAL RELEASE	7/9/2024	

BURY DEPTH:	0.0' - 0.0' to Top		
WATER LEVEL:	3.0'	APPROX. WEIGHT:	6771.9 Lbs
DESIGN SPEC:	ACI 318,ASTM C857	LOADING SPEC:	A-16 (AASHTO HS20-44)
AGENCY:	Frontier	AGENCY SPEC:	

JENSEN PRECAST EST. 1968

WWW.JENSENPRECAST.COM

©2024 Jensen Precast- All rights reserved.
All materials appearing as Jensen Precast documents and the like are proprietary work product and are protected under U.S. copyright and other laws.
Unless in conjunction with business conducted with Jensen Precast, any use of Jensen Precast work product without express, written consent is prohibited, and recipient is prohibited from distributing any and all work product to non-approved third parties under penalty of civil action.

DESCRIPTION:	Intercept Vault Layout 3660x48 Knockout Ducted,Sump 36"x60"C Frontier Traffic TRX Galvanized LAYOUT REVIEW		REV: A-1
PART NUMBER:	200090862	DRAWN BY:	J. Prado
CREATED:	7/9/2024	MODIFIED:	7/9/2024
			SHEET: 1 OF 2

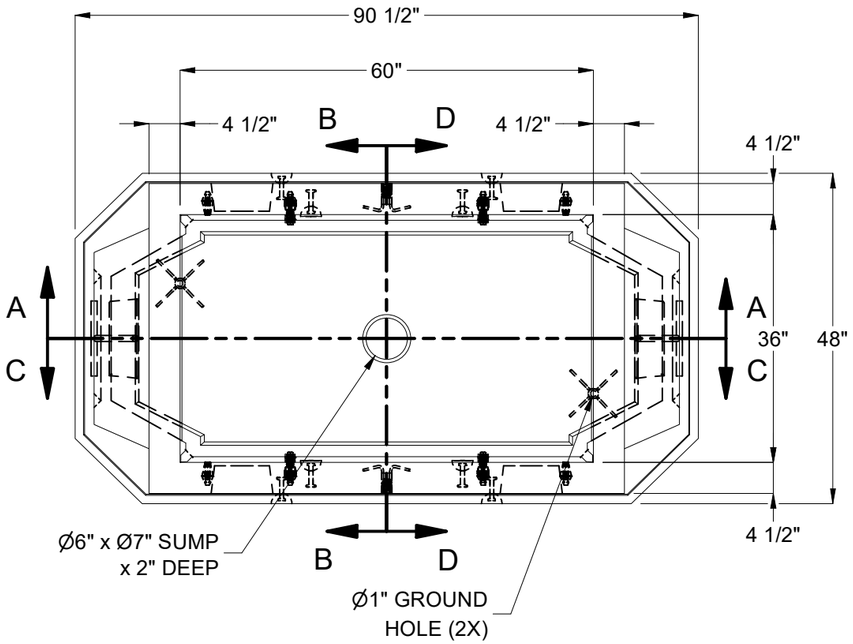

PLAN VIEW W/O TOP SECTION

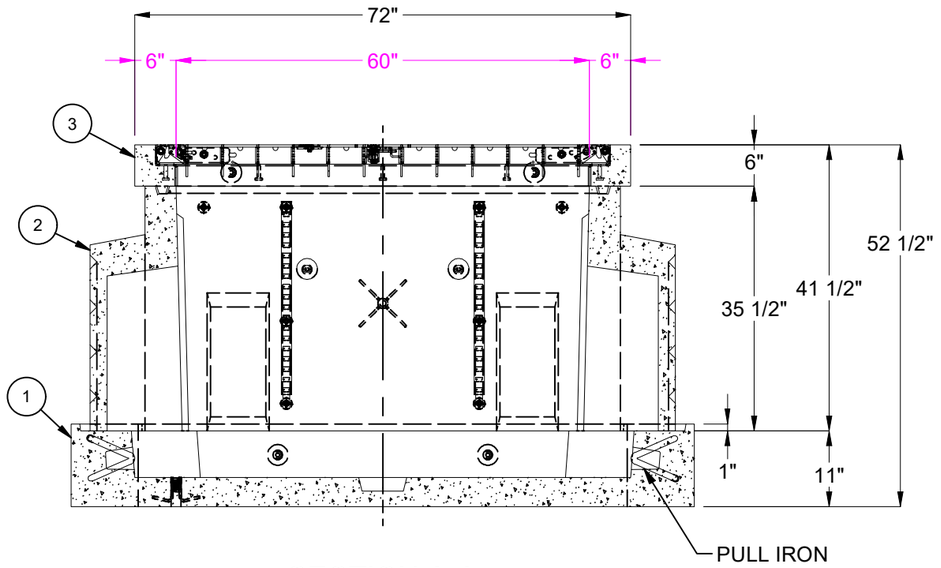

SECTION A-A

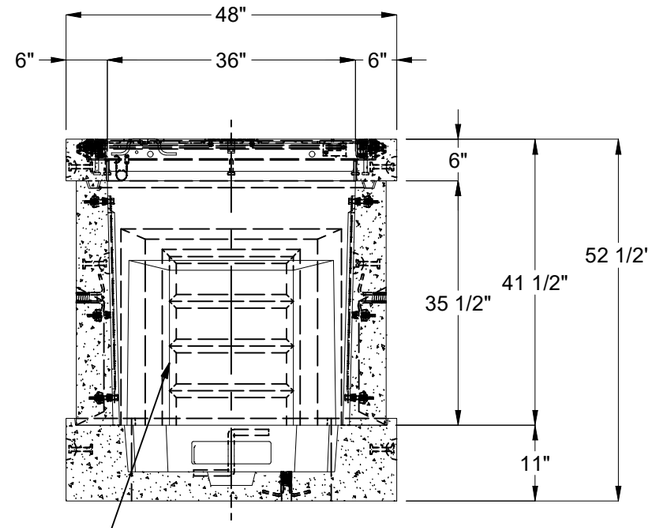

SECTION B-B

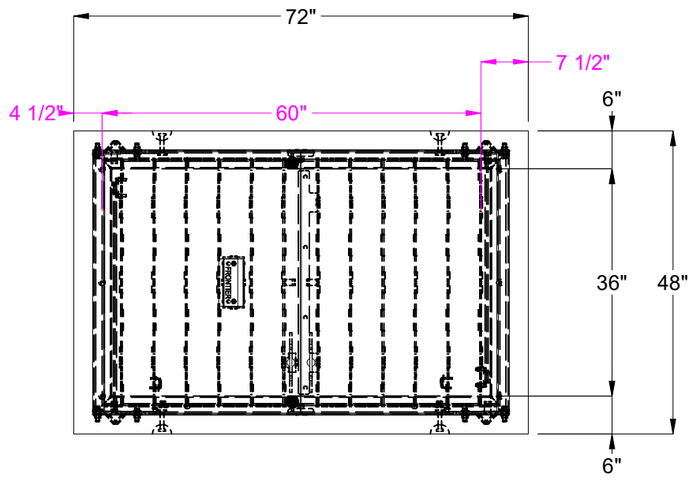

PLAN VIEW OF TOP SECTION

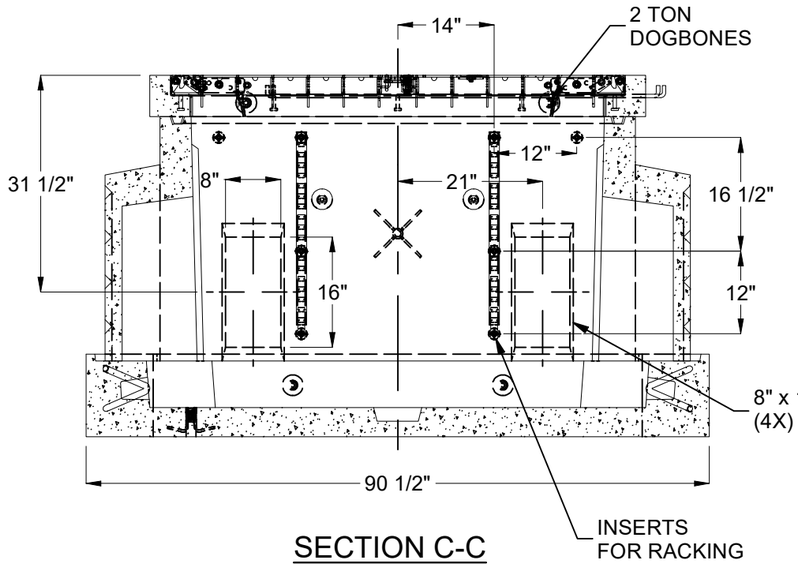

SECTION C-C

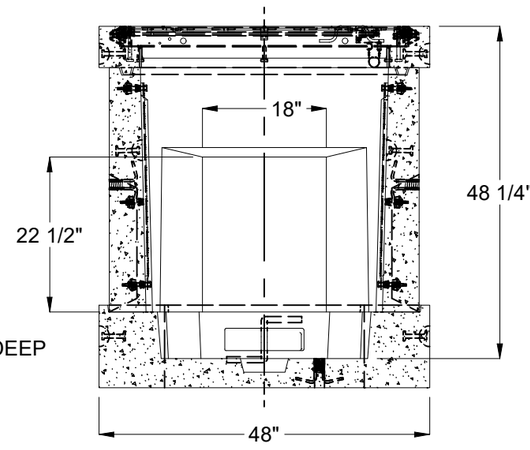

SECTION D-D

BURY DEPTH:	0.0' - 0.0' to Top		
WATER LEVEL:	3.0'	APPROX. WEIGHT:	6771.9 Lbs
DESIGN SPEC:	ACI 318,ASTM C857	LOADING SPEC:	A-16 (AASHTO HS20-44)
AGENCY:	Frontier	AGENCY SPEC:	

JENSEN PRECAST EST. 1968

WWW.JENSENPRECAST.COM

©2024 Jensen Precast- All rights reserved.
All materials appearing as Jensen Precast documents and the like are proprietary work product and are protected under U.S. copyright and other laws.
Unless in conjunction with business conducted with Jensen Precast, any use of Jensen Precast work product without express, written consent is prohibited, and recipient is prohibited from distributing any and all work product to non-approved third parties under penalty of civil action.

DESCRIPTION:	Intercept Vault Layout 3660x48 Knockout Ducted,Sump 36"x60"C Frontier Traffic TRX Galvanized LAYOUT REVIEW		REV: A-1
PART NUMBER:	200090862	DRAWN BY:	J. Prado
CREATED:	7/9/2024	MODIFIED:	7/9/2024
			SHEET: 2 OF 2

200090862.idw