DESIGN NOTES

- FOR COMPLETE DESIGN AND PRODUCT INFORMATION CONTACT JENSEN PRECAST.

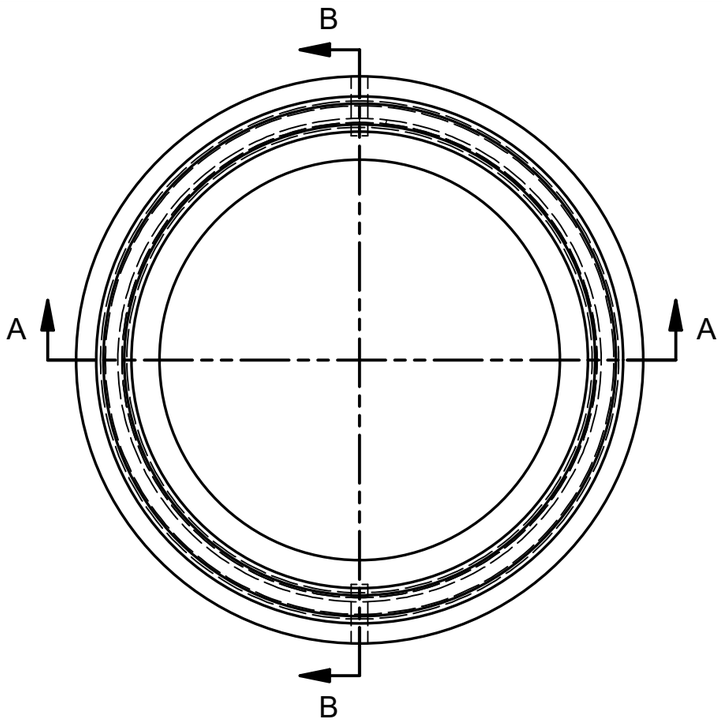

PLAN VIEW

BILL OF MATERIALS

ITEM	QTY	PART NUMBER	DESCRIPTION
1	1.545 ft^3	100005976	CONCRETE MIX GENERIC 4500 PSI
2	1	100006796	REINF HOOP STEEL .25235DIA GA 29DIA
3	1	100044885	LINER PVC 24" x 6" Tall Grade Ring Shaft Tube ARMORLOK

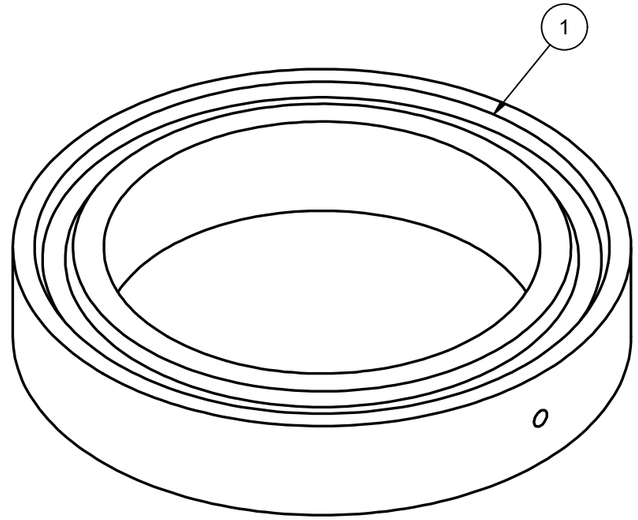

ISO VIEW

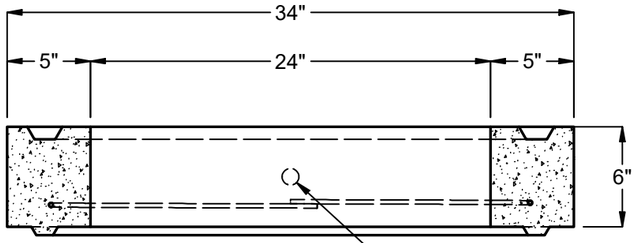

SECTION A-A

Ø1" HOLE SHOWN FOR USE WITH JPC3000 LIFT PIN. LIFTING EMBED AND HARDWARE MAY VARY PER MANUFACTURING LOCATOIN.

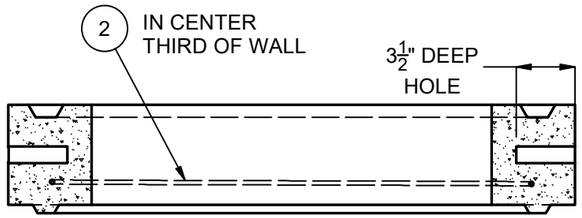

SECTION B-B

LIFTING NOTES

- THIS CONCRETE PRODUCT IS DESIGNED TO BE LIFTED AT 2500 PSI WITH 2 LIFT CONNECTIONS EQUALLY LOADED TO 2 LIFTING POINTS AT A MINIMUM 90° SLING ANGLE, MEASURED FROM HORIZONTAL.

*All rigging shall be design by a qualified professional. Loading diagrams show illustrations of possible rigging setups to achieve the required sling angle and load leg equalization. Other valid rigging configurations are possible. A qualified professional must be consulted prior to lifting.

RIGGING DIAGRAM* | G

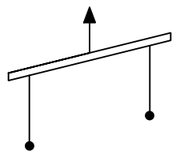

BURY DEPTH:	0.0' - 50.0' to Top		
WATER LEVEL:	0.0'	WEIGHT:	233.52 Lbs
DESIGN SPEC:	AASHTO M199,ASTM C478	LOADING SPEC:	A-16 (AASHTO HS20-44)
REINFORCEMENT TYPE:	Plain Wire	LIFTING TYPE:	Lift Hole

JENSEN PRECAST EST. 1968

WWW.JENSENPRECAST.COM

©2018 Jensen Precast- All rights reserved.
All materials appearing as Jensen Precast documents and the like are proprietary work product and are protected under U.S. copyright and other laws.
Unless in conjunction with business conducted with Jensen Precast, any use of Jensen Precast work product without express, written consent is prohibited, and recipient is prohibited from distributing any and all work product to non-approved third parties under penalty of civil action.

DESCRIPTION:	Grade Ring D2434x6 Int. Liner - PVC CASTING LAYOUT		REV: A-1
PART NUMBER:	200088171	DRAWN BY:	D. Frazier
CREATED:	12/18/2018	MODIFIED:	4/29/2024
			SHEET: 1 OF 1

200088171.idw