BILL OF MATERIALS

ITEM	UNIT QTY	QTY	PART NUMBER	DESCRIPTION
1	1	1	200070992	HN 2436x14 Concrete Box 3/8-16 Alum Nut
2	1	1	100042303	HPC 2436 SMC Cover, Tier-22, Bolt Down, FB Nameplate

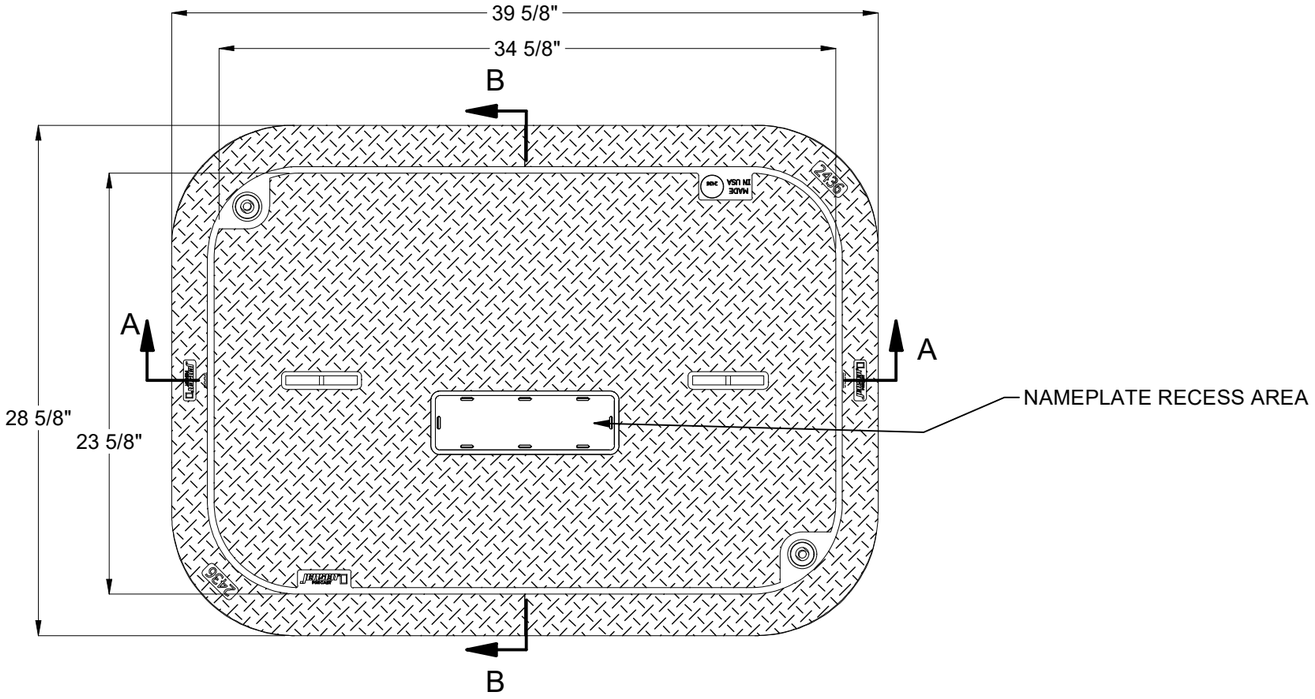

PLAN VIEW

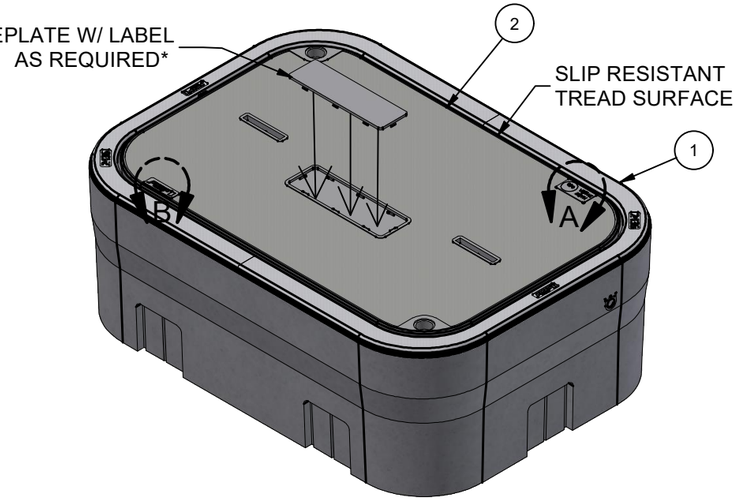

ISO VIEW

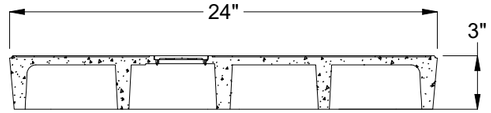

LID

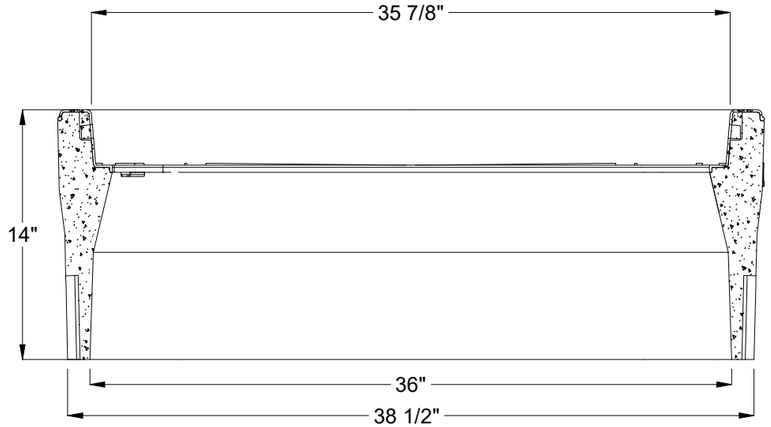

SECTION A-A

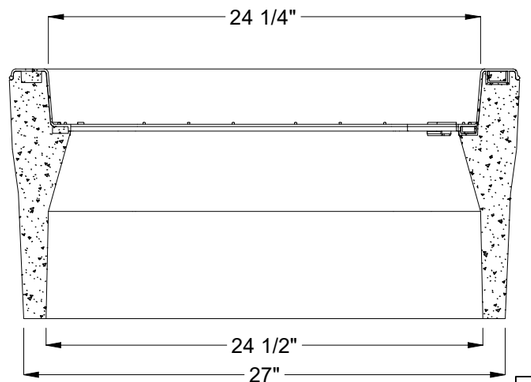

SECTION B-B

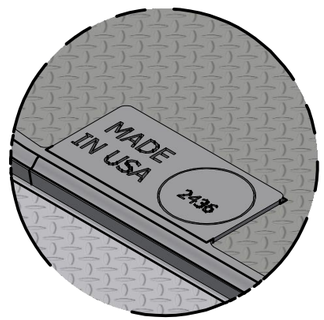

DETAIL A

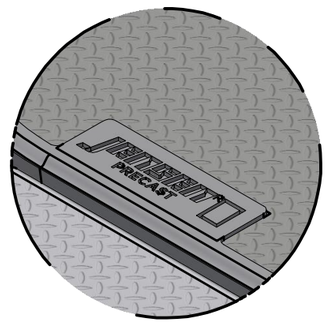

DETAIL B

* PATENT PENDING

REVISION HISTORY			
NO.	DESCRIPTION	DATE	BY
A	INITIAL RELEASE	4/24/2024	K.S.
B	REMOVED BOLT HARDWARE	8/2/2024	M.B.

BURY DEPTH:	0.0' - 0.0' to Top		
WATER LEVEL:	Below Structure	APPROX. WEIGHT:	318.81 Lbs
DESIGN SPEC:	ANSI/SCTE 77,ASTM C857	LOADING SPEC:	A-03 (300 psf)
AGENCY:		AGENCY SPEC:	

JENSEN PRECAST EST. 1968

WWW.JENSENPRECAST.COM

©2024 Jensen Precast- All rights reserved.
All materials appearing as Jensen Precast documents and the like are proprietary work product and are protected under U.S. copyright and other laws.
Unless in conjunction with business conducted with Jensen Precast, any use of Jensen Precast work product without express, written consent is prohibited, and recipient is prohibited from distributing any and all work product to non-approved third parties under penalty of civil action.

DESCRIPTION:	HN 2436x14 Concrete/SMC Assembly Nameplate LAYOUT REVIEW		REV: A-2-1
PART NUMBER:	200087565	DRAWN BY:	M. Baumann
CREATED:	4/5/2024	MODIFIED:	8/2/2024
			SHEET: 1 OF 1

200087565.idw