BILL OF MATERIALS

ITEM	UNIT QTY	QTY	PART NUMBER	DESCRIPTION
1	0.452 ft^3	0.452 ft^3	100035039	CONCRETE COMPOSITE LID MIX BRUCE
3	0.643 lbmass	1.285 lbmass	100008157	Combo Mat Fiber Reinforcing 24 Oz
2	0.500 ft	1.000 ft	100008155	REINF ROD SMOOTH PENCIL #2 1/4 SS
4	1	2	100041390	NAME PLATE RETAINER FOR 3x10 POLY

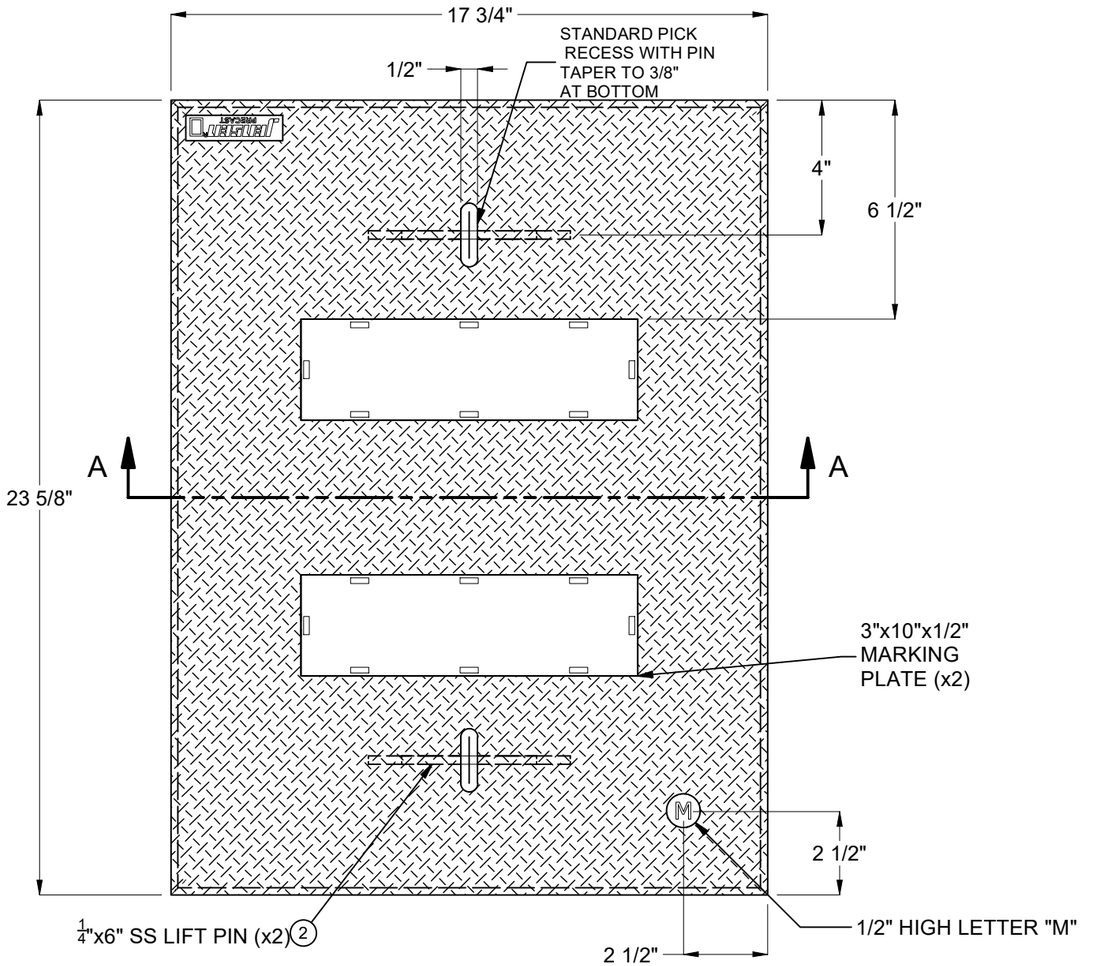

PLAN VIEW

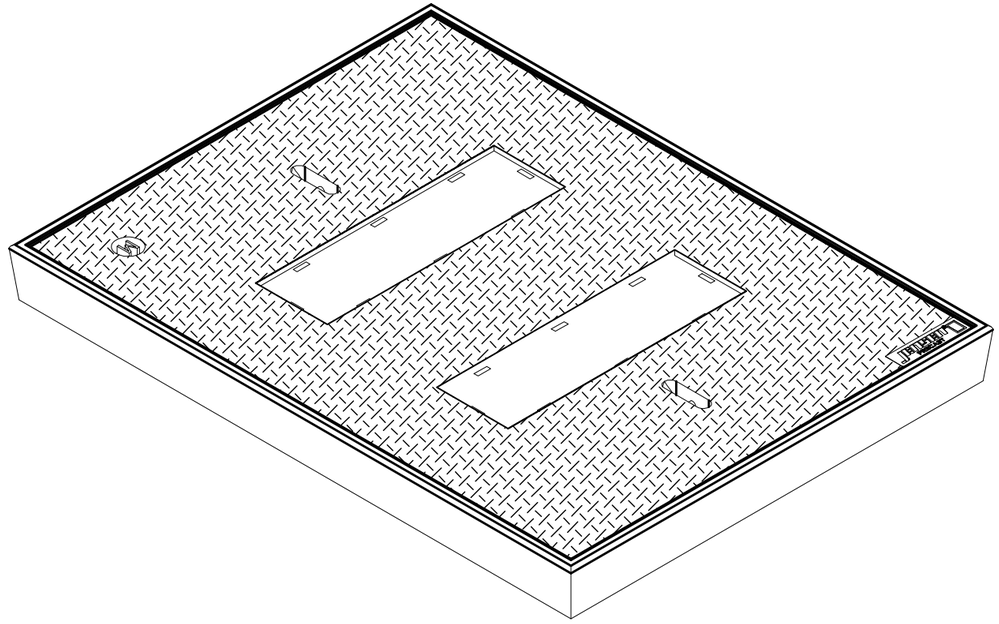

ISOMETRIC VIEW

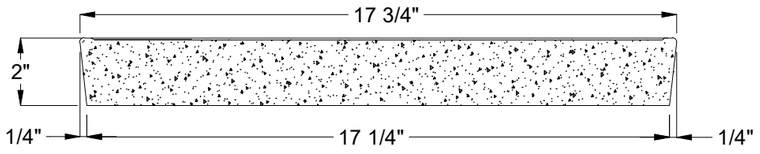

SECTION A-A

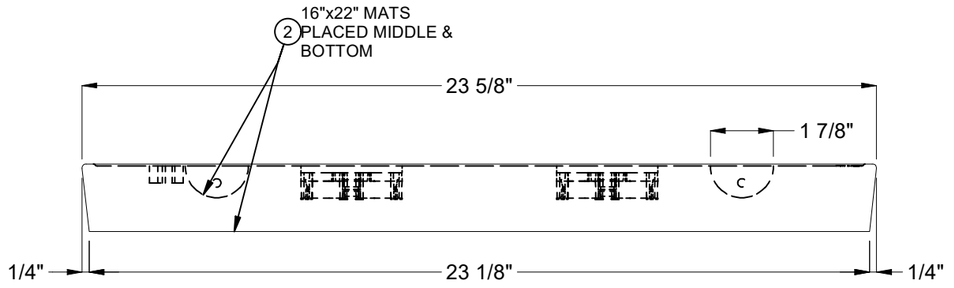

REVISION HISTORY

REV	DESCRIPTION	DATE	BY
A	DRAWING CREATED	3/5/2024	K. Steinhorst

DESIGN SPEC: ANSI/SCTE-77	APPROX. WEIGHT: 55.58 lbs		
AGENCY: HDOT	DESIGN/TEST LOAD:		
AGENCY SPEC: TE-37	LOADING SPEC:		

JENSEN PRECAST EST. 1968

©2024 Jensen Precast- All rights reserved.
Unless expressly authorized by Jensen Precast any use or duplication is strictly prohibited under penalty of civil action or codes.

DESCRIPTION: HPC 1824x2 Polymer Cover Non-Bolt Down Dual Nameplate HDOT TE-37

REV: A-3

SHEET: 1 OF 1

PART #: 200086298		DRAWN BY: K. Steinhorst	
CREATED: 2/22/2024		MODIFIED: 3/5/2024	

200086298.idw