BILL OF MATERIALS

ITEM	UNIT QTY	QTY	PART NUMBER	DESCRIPTION
1	0.367 ft^3	0.370 ft^3	100035039	CONCRETE COMPOSITE LID MIX BRUCE
2	0.500 ft	0.500 ft	100008155	REINF ROD SMOOTH PENCIL #2 1/4 SS
3	0.767 lbmass	0.767 lbmass	100008157	Combo Mat Fiber Reinforcing 24 Oz
4	1	1	100041390	NAME PLATE RETAINER FOR 3x10 POLY

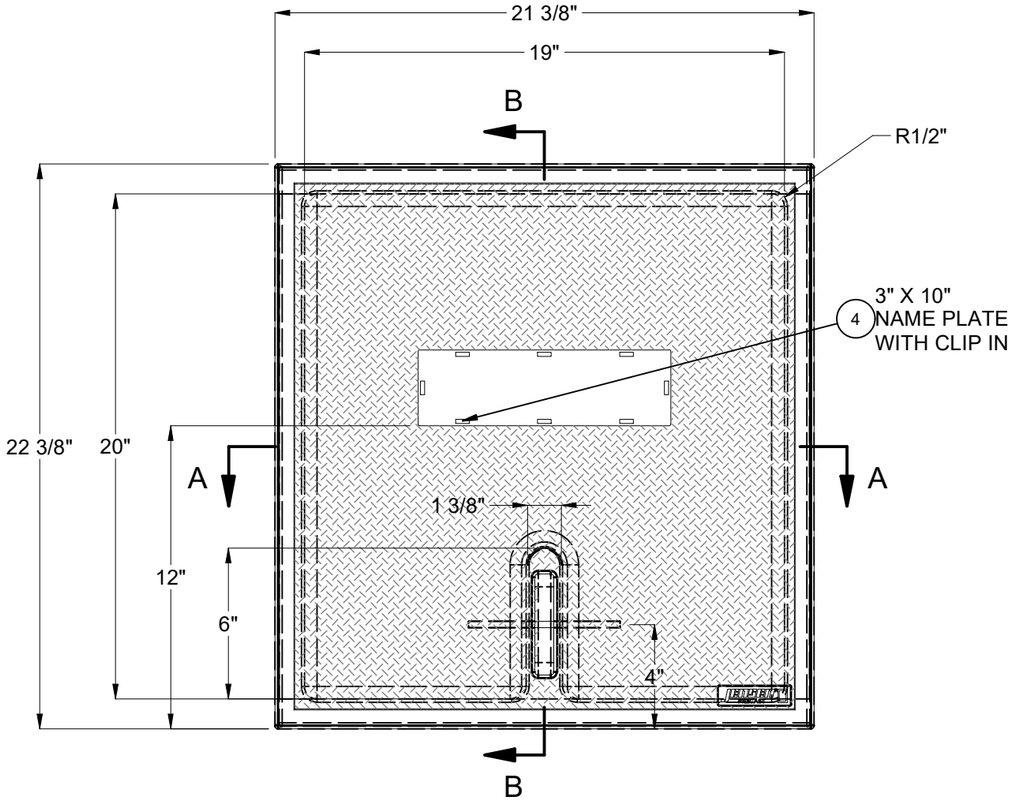

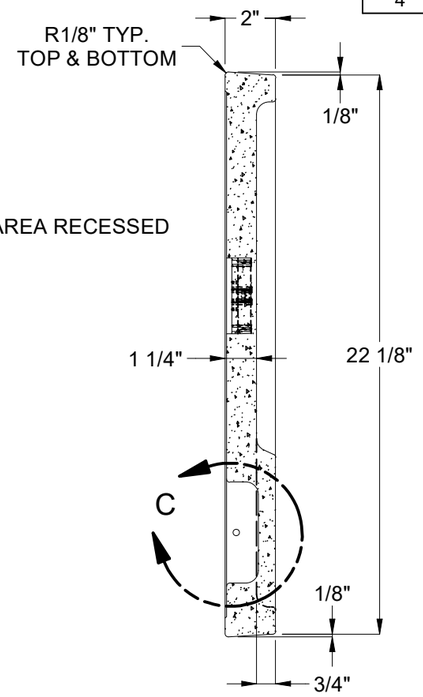

SECTION B-B

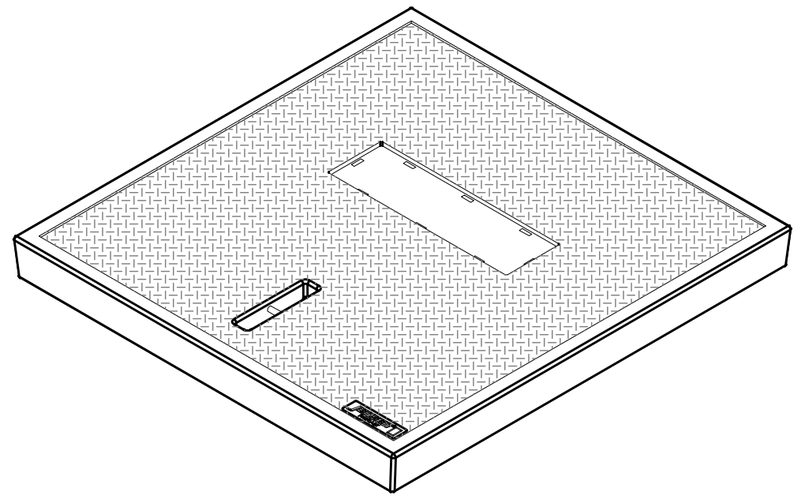

ISOMETRIC VIEW

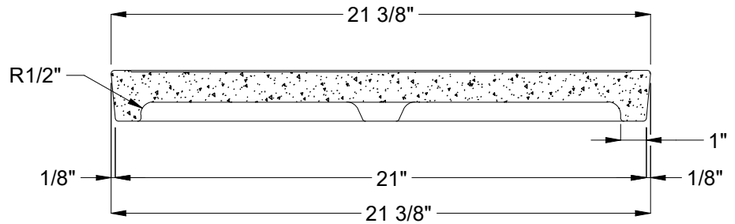

SECTION A-A

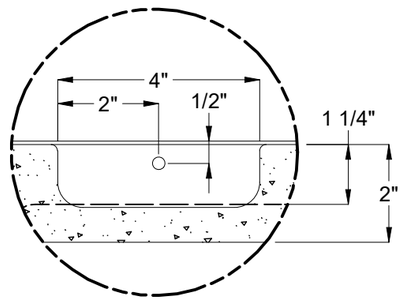

DETAIL C

REVISION HISTORY			
REV	DESCRIPTION	DATE	BY
A	DRAWING CREATED	3/5/2024	K. Steinhorst

PALLET QUANTITY:	APPROX. WEIGHT: 44.91 lbs		
CERTIFICATION: N/A	DESIGN/TEST LOAD:		
DESIGN SPEC: N/A	LOADING SPEC:		
AGENCY:	AGENCY SPEC:		

JENSEN COMPOSITES

WWW.JENSENPRECAST.COM

©2018 Jensen Precast- All rights reserved.
All materials appearing as Jensen Precast documents and the like are proprietary work product and are protected under U.S. copyright and other laws.
Unless in conjunction with business conducted with Jensen Precast, any use of Jensen Precast work product without express, written consent is prohibited, and recipient is prohibited from distributing any and all work product to non-approved third parties under penalty of civil action.

DESCRIPTION: HPC 2122x2 Polymer Cover Non-Bolt Down Nameplate			REV: A-3
PART #: 200086287	DRAWN BY: K. Steinhorst		SHEET: 1 OF 1
CREATED: 2/22/2024	MODIFIED: 3/5/2024		

200086287.idw