DESIGN NOTES
■ THIS PRODUCT MUST ONLY BE PRODUCED IN A JENSEN INFRASTRUCTURE FACILITY.
■ ALL CONCRETE MUST HAVE A 28 DAY COMPRESSIVE STRENGTH OF 5000 PSI.
■ REINFORCING STEEL MUST COMPLY WITH ASTM A615 GRADE 60 OR ASTM A706 GRADE 60.
■ EQUIVALENT AREA WELDED WIRE REINFORCING CAGES MAY BE UTILIZED IN LIEU OF GRADE 60 REBAR.
■ WELDED WIRE REINFORCING MUST COMPLY WITH ASTM A1064.
■ SEE TITLE BLOCK FOR BURY DEPTH RANGE, WATER TABLE LEVEL, AND DESIGN AND LOADING SPECIFICATIONS.
■ SOIL UNIT WEIGHT DRY – 110 lbs/cu.ft.
■ EQUIVALENT LATERAL EARTH PRESSURE DRY: 40 lbs/cu.ft.
■ SOIL UNIT WEIGHT WET – 120 lbs/cu.ft
■ EQUIVALENT LATERAL EARTH PRESSURE WET: 80 lbs/cu.ft.
■ UNLESS OTHERWISE NOTED OR SPECIFIED THE STRUCTURE MUST BE INSTALLED PER "JENSEN INFRASTRUCTURE UNDERGROUND UTILITY STRUCTURES INSTALLATION PROCEDURE" FOUND AT https://www.jensenprecast.com/Utility-Structures-Installation-Instructions-d2595.pdf

BILL OF MATERIALS

ITEM	UNIT QTY	QTY	PART NUMBER	DESCRIPTION	MASS (lb)
1	1	1	100007600	CAS2-4878-AH4-DP-G-CL-GR-LV-NVE-OH06	756
2	AS NEEDED	AS NEEDED	200114671	Riser 4878x6 Overton Power Small	567
3	AS NEEDED	AS NEEDED	200114672	Riser 4878x12 Overton Power Small	1134
4	1	1	100021539	Vault 4878x36 Rect. Bottom Section Terminators Sump Overton Power Small	6104

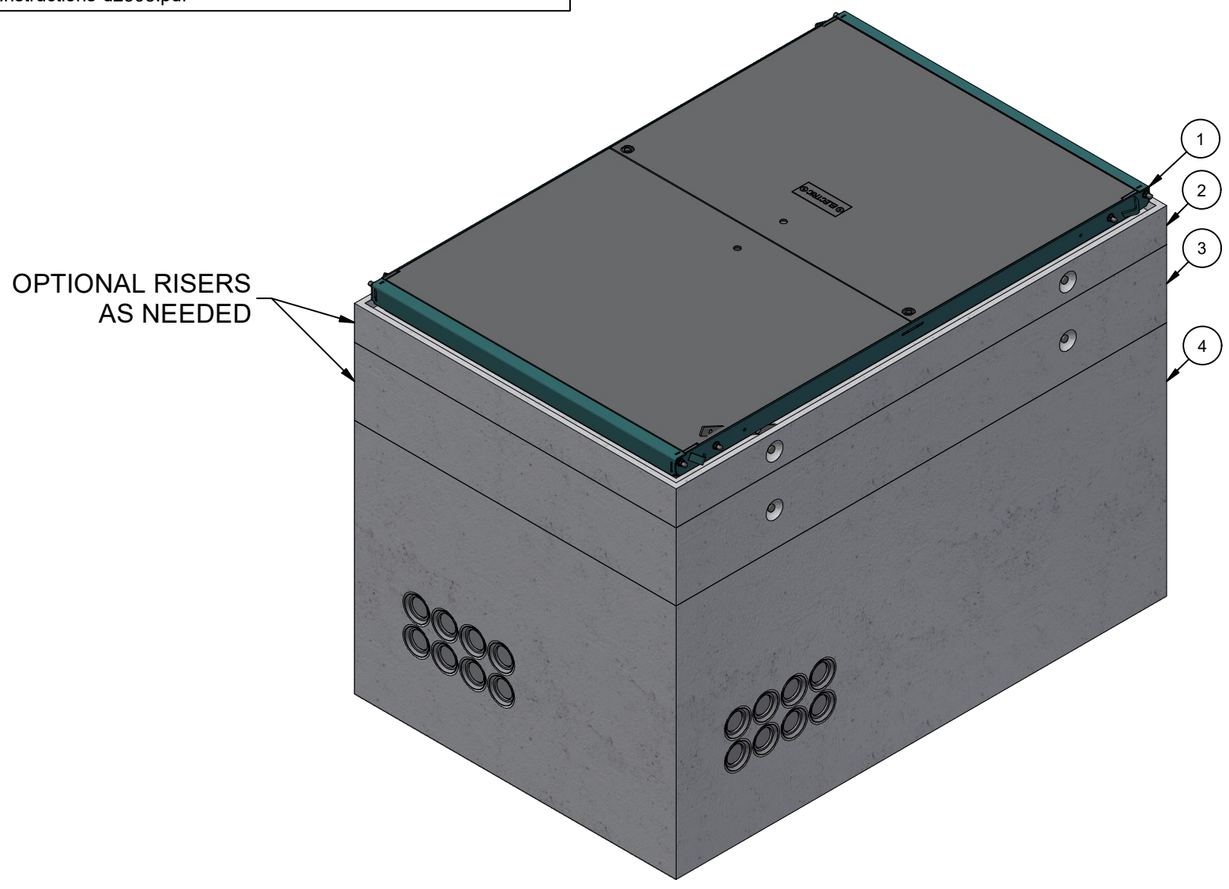

ISO VIEW

CHANGE HISTORY			
NO.	DESCRIPTION	DATE	BY
1	2402-56540	2/21/2024	MGL
2	ALIGNED TERMINATORS	7/16/2026	AMV

BURY DEPTH:	0.0' - 0.0' to Top		
WATER LEVEL:	5.0'	APPROX. WEIGHT:	8566.08 Lbs
DESIGN SPEC:	ACI 318,ASTM C857	LOADING SPEC:	A-16 (AASHTO HS20-44)
AGENCY:	Overton Power	AGENCY SPEC:	Small

Infrastructure
JENSEN
WWW.JENSENINFRASTRUCTURE.COM

©2026 Jensen Infrastructure - All rights reserved.
All materials appearing as Jensen Infrastructure documents and the like are proprietary work product and are protected under U.S. copyright and other laws.
Unless in conjunction with business conducted with Jensen Infrastructure, any use of Jensen Infrastructure work product without express, written consent is prohibited, and recipient is prohibited from distributing any and all work product to non-approved third parties under penalty of civil action.
This product shall only be produced in a Jensen Infrastructure facility.

DESCRIPTION:	Vault Layout 4878x60 Terminators Sump 48"x78"C Overton Power Small LAYOUT REVIEW		REV: B-1
PART NUMBER:	200086240	DRAWN BY:	A. Viveiros
CREATED:	2/21/2024	MODIFIED:	7/17/2026
			SHEET: 1 OF 2

200086240.idw

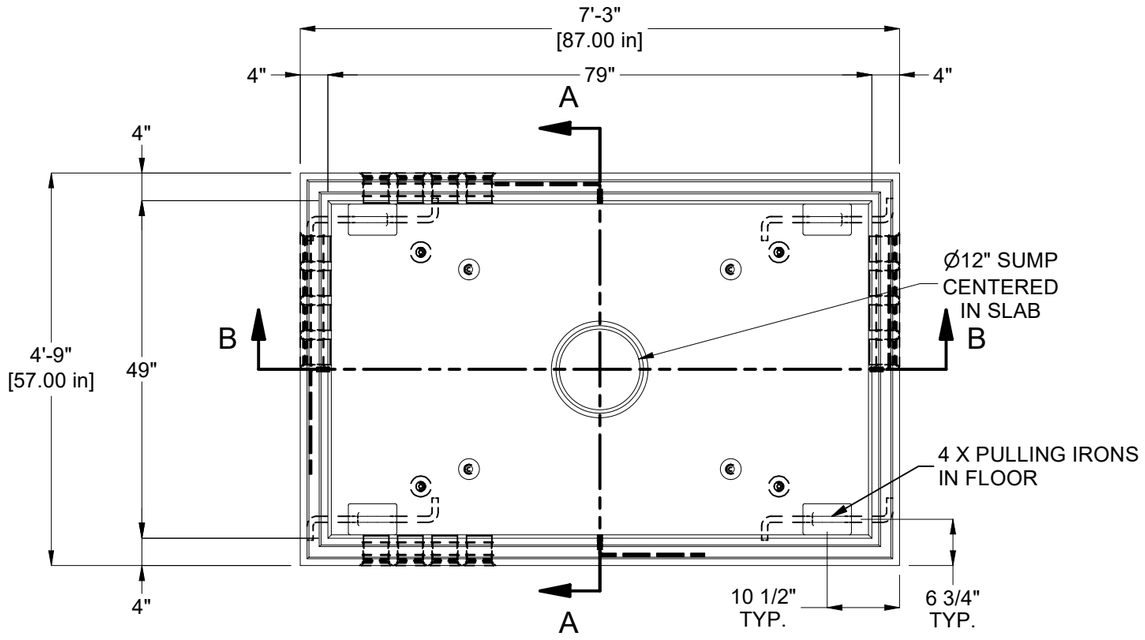

PLAN VIEW
(BASE SHOWN)

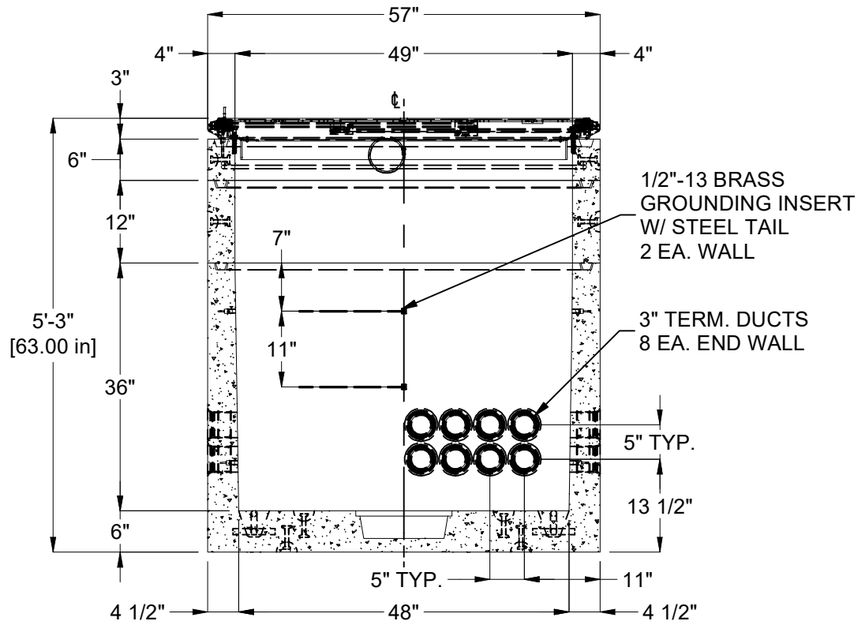

SECTION A-A
(OPPOSITE SIDE SIMILAR)

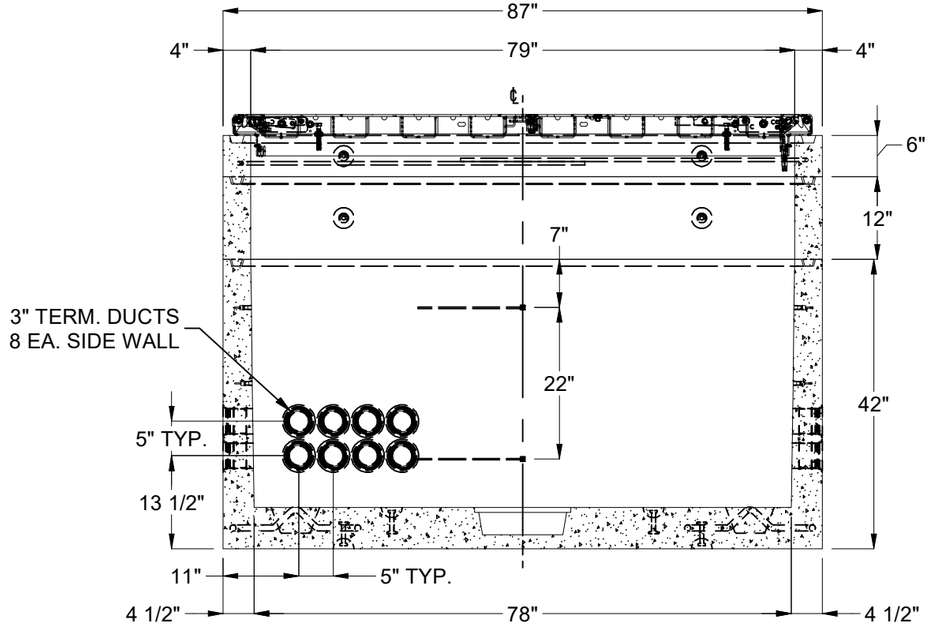

SECTION B-B
(OPPOSITE SIDE SIMILAR)

BURY DEPTH:	0.0' - 0.0' to Top		
WATER LEVEL:	5.0'	APPROX. WEIGHT:	8566.08 Lbs
DESIGN SPEC:	ACI 318,ASTM C857	LOADING SPEC:	A-16 (AASHTO HS20-44)
AGENCY:	Overton Power	AGENCY SPEC:	Small

Infrastructure
JENSEN
WWW.JENSENINFRASTRUCTURE.COM

©2026 Jensen Infrastructure - All rights reserved.
All materials appearing as Jensen Infrastructure documents and the like are proprietary work product and are protected under U.S. copyright and other laws.
Unless in conjunction with business conducted with Jensen Infrastructure, any use of Jensen Infrastructure work product without express, written consent is prohibited, and recipient is prohibited from distributing any and all work product to non-approved third parties under penalty of civil action.
This product shall only be produced in a Jensen Infrastructure facility.

DESCRIPTION:
Vault Layout 4878x60 Terminators Sump 48"x78"C Overton Power Small
LAYOUT DRAWING

PART NUMBER:	200086240	DRAWN BY:	A. Viveiros
CREATED:	2/21/2024	MODIFIED:	7/17/2026

REV: B-1
SHEET: 2 OF 2

200086240.idw