BILL OF MATERIALS

ITEM	UNIT QTY	QTY	PART NUMBER	DESCRIPTION
1	1	1	100001926	HN 1017x12 Concrete Box 3/8-16 Alum Nut
2	1	1	100044353	HPC 1017x2 SMC Cover Bolt Down Nameplate

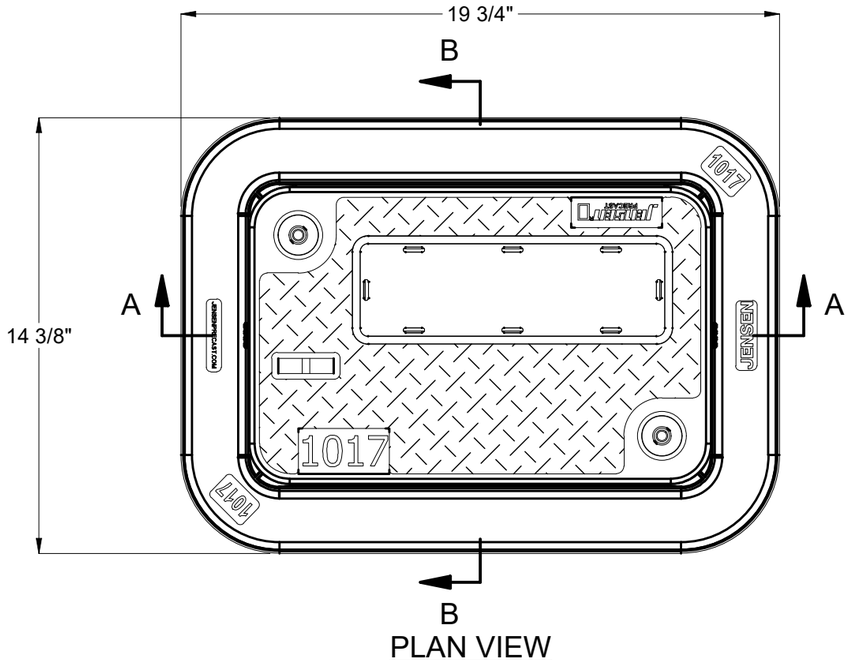

PLAN VIEW

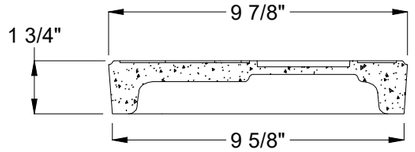

LID

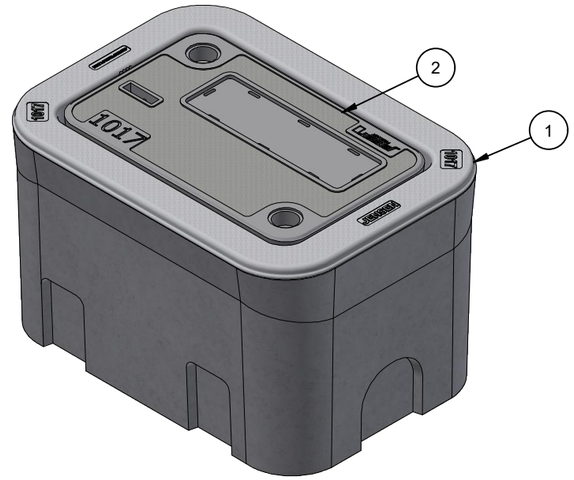

ISO VIEW

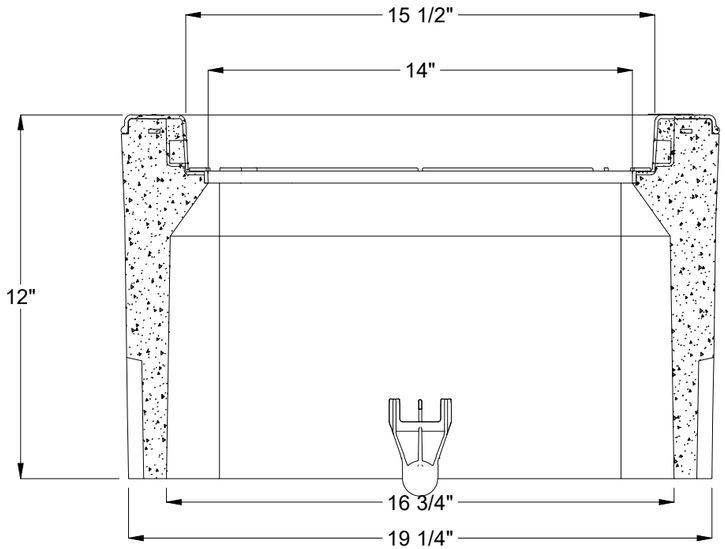

SECTION A-A

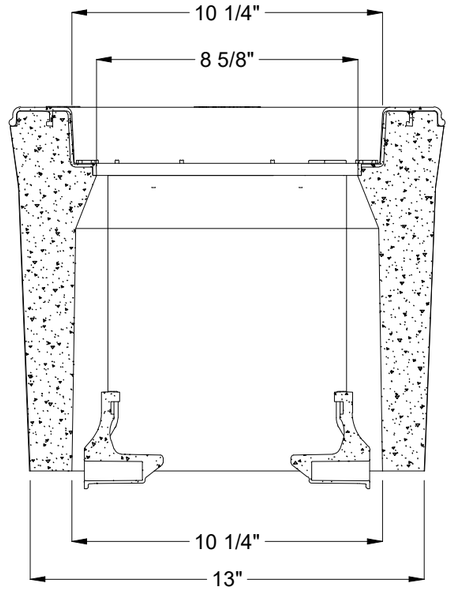

SECTION B-B

200085166.idw

REVISION HISTORY

REV	DESCRIPTION	DATE	BY
A	INITIAL RELEASE		MB

PALLET QUANTITY: 8	APPROX. WEIGHT: SEE TABLE		
CERTIFICATION:	DESIGN/TEST LOAD:		
DESIGN SPEC: ASTM C857	LOADING SPEC: N/A		
AGENCY:	AGENCY SPEC:		

JENSEN PRECAST EST. 1968

WWW.JENSENPRECAST.COM

©2018 Jensen Precast- All rights reserved.
All materials appearing as Jensen Precast documents and the like are proprietary work product and are protected under U.S. copyright and other laws.
Unless in conjunction with business conducted with Jensen Precast, any use of Jensen Precast work product without express, written consent is prohibited, and recipient is prohibited from distributing any and all work product to non-approved third parties under penalty of civil action.

DESCRIPTION: HN 1017x12 Concrete/SMC Assembly Nameplate

REV: A-2

PART #: 200085166

DRAWN BY: M. Baumann

CREATED: 1/24/2024

MODIFIED: 8/28/2024

SHEET: 1 OF 1