NOTES
■ FOR COMPLETE DESIGN AND PRODUCT INFORMATION CONTACT JENSEN PRECAST.

BILL OF MATERIALS

ITEM	UNIT QTY	QTY	PART NUMBER	DESCRIPTION
1	78.880 ft^3	78.880 ft^3	100011425	CONCRETE MIX GENERIC 5000 PSI
2	1	1	200083897	REINFORCING MAT 200083897
3	*Varies*	336.000 in	100024619	STRUT C-CHANNEL CONCRETE INSERT 1-5/8 X 1-5/8 12GA W/ANCHORS GALV
4	1	8	100004878	ANCHOR UTILITY .671DIA 5-SLAB GALV P75 5UA671

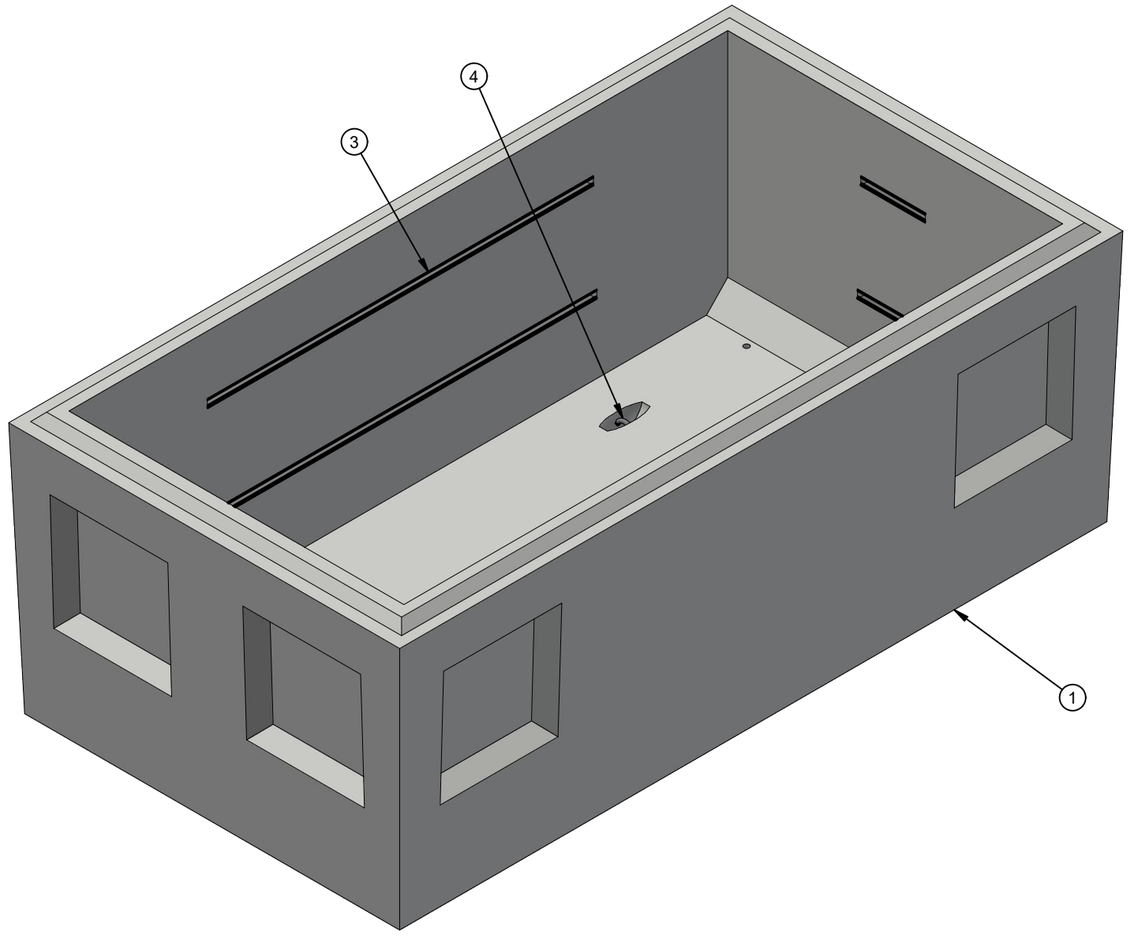

ISO VIEW

LIFTING NOTES
■ THIS CONCRETE PRODUCT IS DESIGNED TO BE LIFTED AT 2500 PSI WITH 4 LIFT CONNECTIONS EQUALLY LOADED TO 4 LIFTING POINTS AT A MINIMUM 60° SLING ANGLE, MEASURED FROM HORIZONTAL.
*All rigging shall be design by a qualified professional. Loading diagrams show illustrations of possible rigging setups to achieve the required sling angle and load leg equalization. Other valid rigging configurations are possible. A qualified professional must be consulted prior to lifting.

RIGGING DIAGRAM*	C

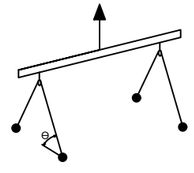

BURY DEPTH:	0.0' - 4.2' to Top		
WATER LEVEL:	5.0'	WEIGHT:	11924.06 Lbs
DESIGN SPEC:	ACI 318,ASTM C857	LOADING SPEC:	A-16 (AASHTO HS20-44)
REINFORCEMENT TYPE:	Rebar	LIFTING TYPE:	A-Anchor

JENSEN PRECAST EST. 1968

WWW.JENSENPRECAST.COM

©2024 Jensen Precast- All rights reserved.
All materials appearing as Jensen Precast documents and the like are proprietary work product and are protected under U.S. copyright and other laws.
Unless in conjunction with business conducted with Jensen Precast, any use of Jensen Precast work product without express, written consent is prohibited, and recipient is prohibited from distributing any and all work product to non-approved third parties under penalty of civil action.

CHANGE HISTORY			
NO.	DESCRIPTION	DATE	BY
1	2311-56194	12/1/2023	JW
2	Added Sump to Floor	1/24/2024	JW

DESCRIPTION:	Vault 60120x42.5 Rect. Bottom Section Sump CASTING LAYOUT		REV: A-2-1
PART NUMBER:	200083895	DRAWN BY:	J. Warren
CREATED:	12/16/2019	MODIFIED:	1/24/2024
			SHEET: 1 OF 2

200083895.idw

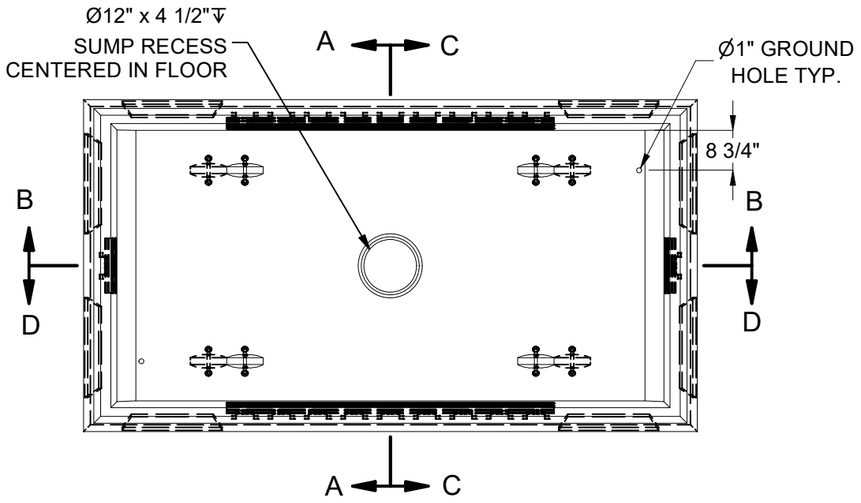

PLAN VIEW

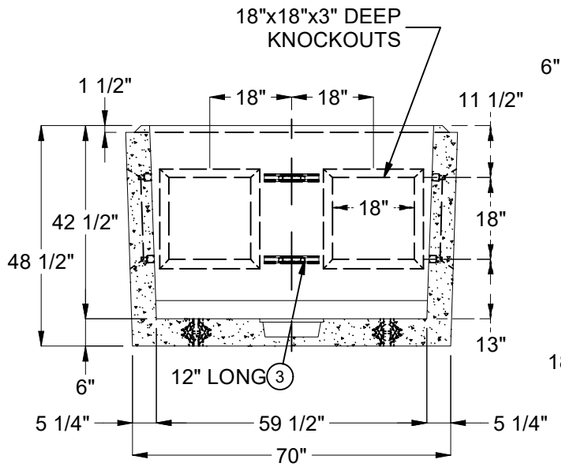

SECTION A-A

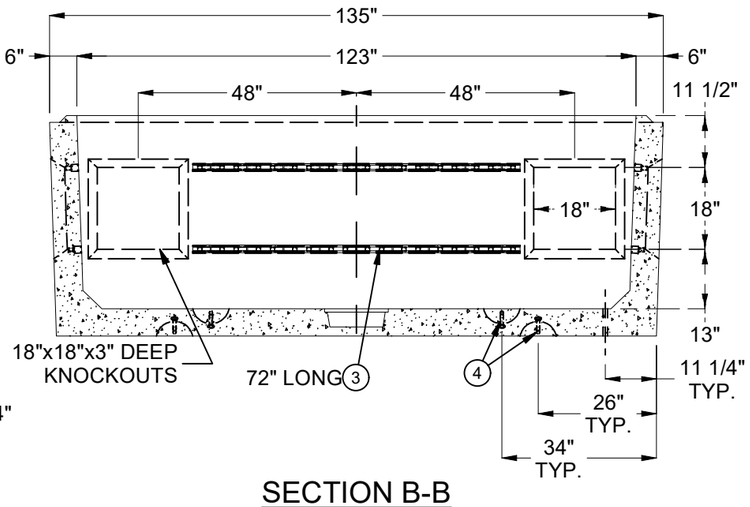

SECTION B-B

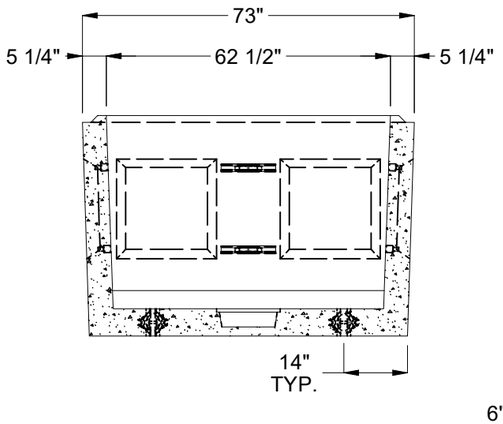

SECTION C-C

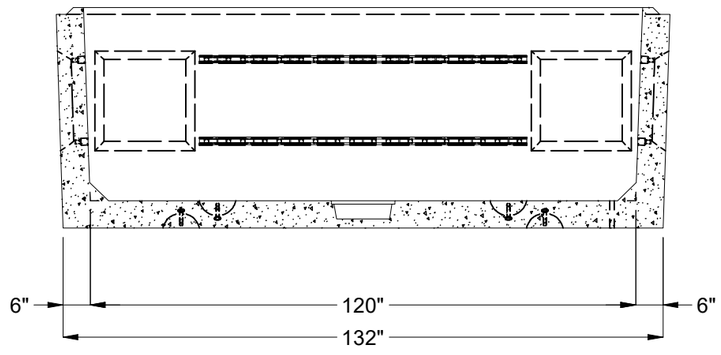

SECTION D-D

BURY DEPTH:	0.0' - 4.2' to Top		
WATER LEVEL:	5.0'	WEIGHT:	11924.06 Lbs
DESIGN SPEC:	ACI 318,ASTM C857	LOADING SPEC:	A-16 (AASHTO HS20-44)
REINFORCEMENT TYPE:	Rebar	LIFTING TYPE:	A-Anchor

JENSEN PRECAST EST. 1968

WWW.JENSENPRECAST.COM

©2024 Jensen Precast- All rights reserved.
All materials appearing as Jensen Precast documents and the like are proprietary work product and are protected under U.S. copyright and other laws.
Unless in conjunction with business conducted with Jensen Precast, any use of Jensen Precast work product without express, written consent is prohibited, and recipient is prohibited from distributing any and all work product to non-approved third parties under penalty of civil action.

DESCRIPTION:	Vault 60120x42.5 Rect. Bottom Section Sump CASTING DRAWING		REV: A-2-1
PART NUMBER:	200083895	DRAWN BY:	J. Warren
CREATED:	12/16/2019	MODIFIED:	1/24/2024
			SHEET: 2 OF 2

200083895.idw