DESIGN NOTES
■ FOR COMPLETE DESIGN AND PRODUCT INFORMATION CONTACT JENSEN PRECAST.

BILL OF MATERIALS

ITEM	QTY	PART NUMBER	DESCRIPTION
1	6.951 ft^3	100011429	CONCRETE MIX GENERIC 7000 PSI
2	4	100002767	Insert Ferrule Loop 0.75 x 3.5" Zinc (F42 or Equiv.)
3	1	300153790	REINFORCING MAT 300153790

200082415.idw

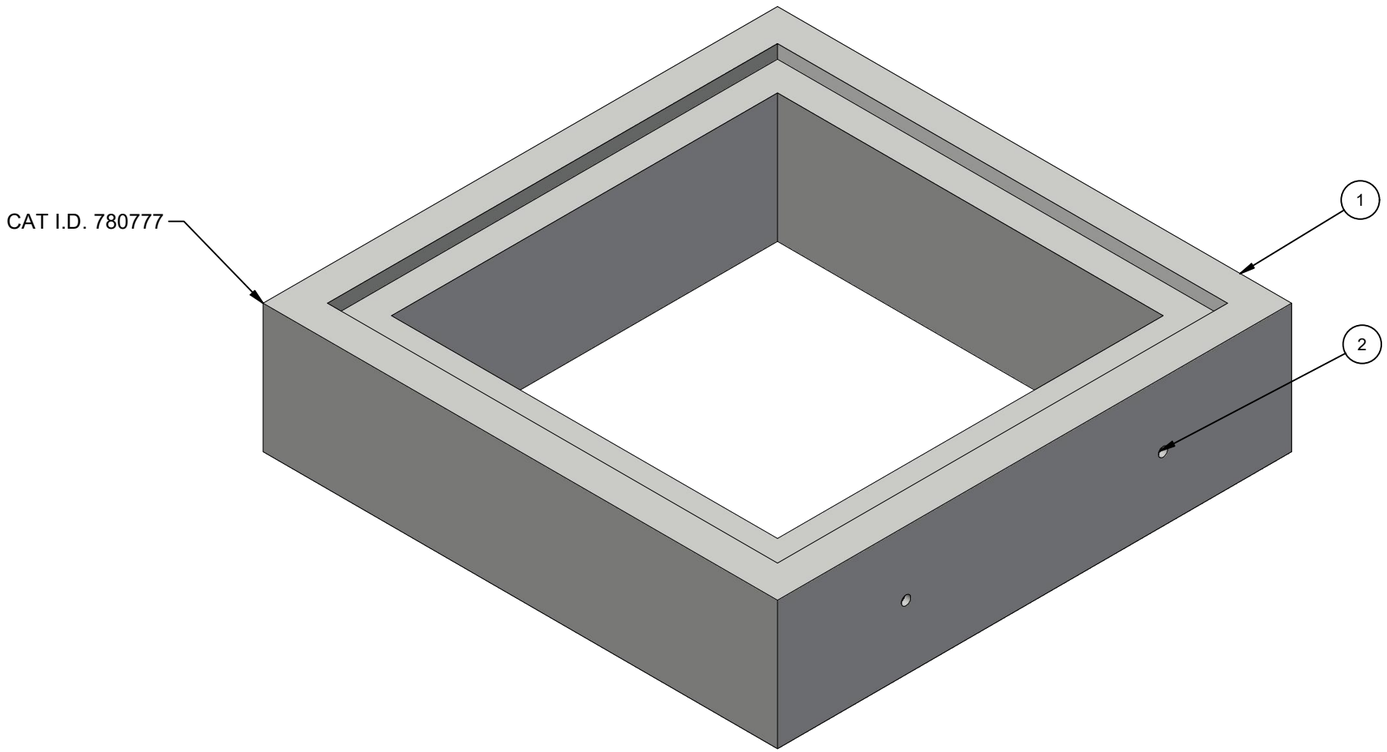

ISO LAYOUT

LIFTING NOTES
■ THIS CONCRETE PRODUCT IS DESIGNED TO BE LIFTED AT 2500 PSI WITH 4 LIFT CONNECTIONS EQUALLY LOADED TO 4 LIFTING POINTS AT A MINIMUM 90° SLING ANGLE, MEASURED FROM HORIZONTAL.

BURY DEPTH:	0.5' - 4.5' to Top		
WATER LEVEL:	5.0'	WEIGHT:	1045.65 Lbs
DESIGN SPEC:	ACI 318,ASTM C857	LOADING SPEC:	A-16 (AASHTO HS20-44)
REINFORCEMENT TYPE:	Rebar	LIFTING TYPE:	Insert

JENSEN PRECAST EST. 1968

WWW.JENSENPRECAST.COM

©2023 Jensen Precast- All rights reserved.
All materials appearing as Jensen Precast documents and the like are proprietary work product and are protected under U.S. copyright and other laws.
Unless in conjunction with business conducted with Jensen Precast, any use of Jensen Precast work product without express, written consent is prohibited, and recipient is prohibited from distributing any and all work product to non-approved third parties under penalty of civil action.

REVISION HISTORY

REV	DESCRIPTION	DATE	BY
A	DRAWING CREATED	11/15/2023	E.Fine

DESCRIPTION:	Riser 4242x12 SnoPUD 780777 CASTING LAYOUT		REV: B-2
PART NUMBER:	200082415	DRAWN BY: E.Fine	SHEET: 1 OF 2
CREATED:	11/15/2023	MODIFIED: 11/15/2023	

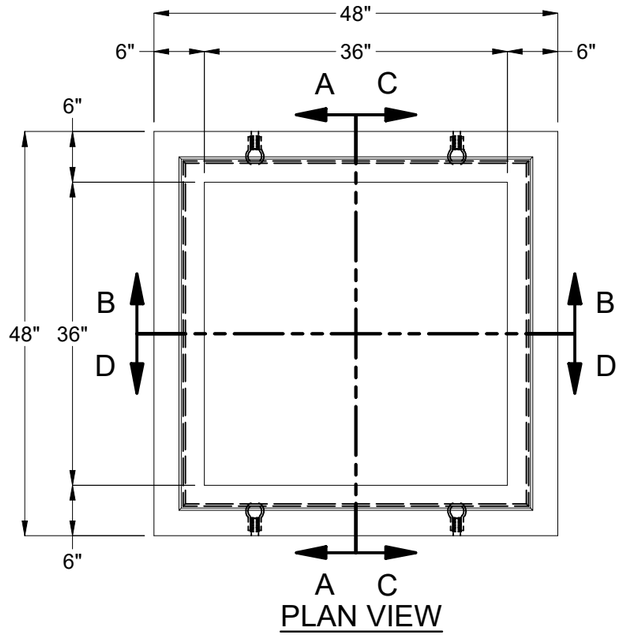

PLAN VIEW

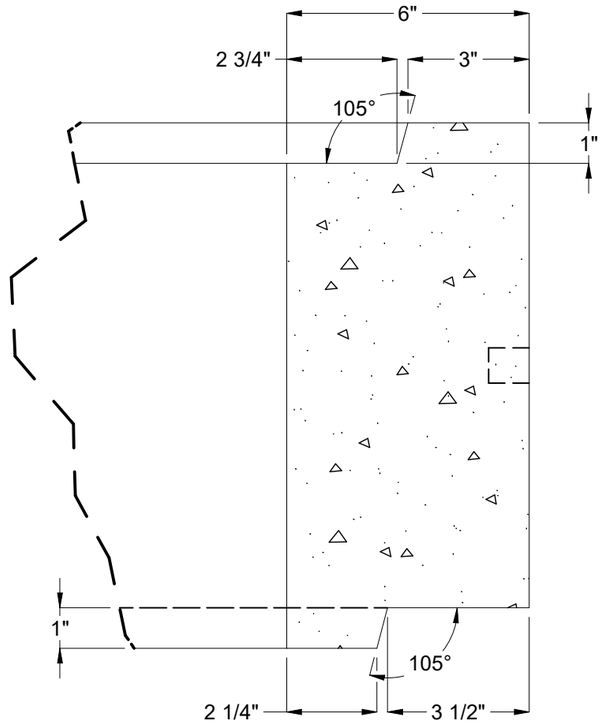

KEYWAY DETAIL
(INSERT TURNED OFF FOR CLARITY)

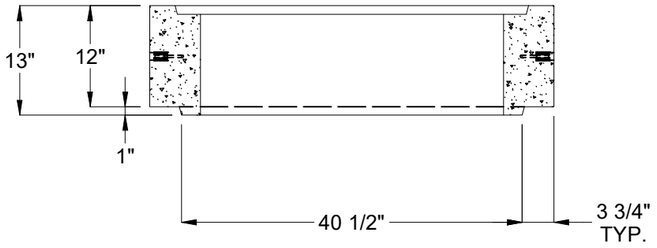

SECTION A-A

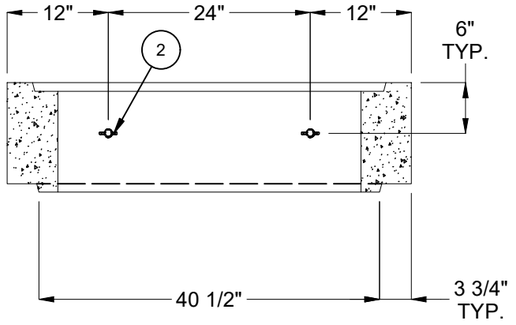

SECTION B-B

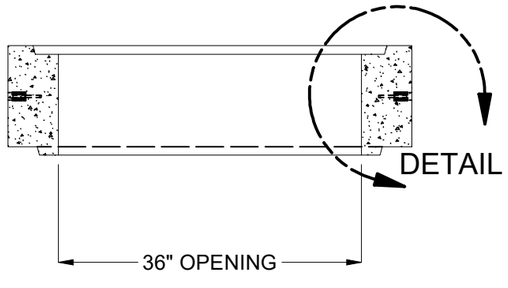

SECTION C-C

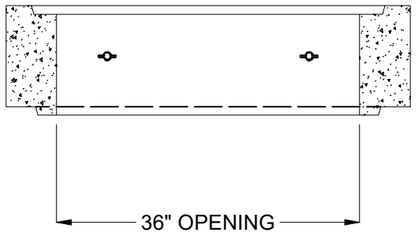

SECTION D-D

BURY DEPTH:	0.5' - 4.5' to Top		
WATER LEVEL:	5.0'	WEIGHT:	1045.65 Lbs
DESIGN SPEC:	ACI 318,ASTM C857	LOADING SPEC:	A-16 (AASHTO HS20-44)
REINFORCEMENT TYPE:	Rebar	LIFTING TYPE:	Insert

JENSEN PRECAST EST. 1968

WWW.JENSENPRECAST.COM

©2023 Jensen Precast- All rights reserved.
All materials appearing as Jensen Precast documents and the like are proprietary work product and are protected under U.S. copyright and other laws.
Unless in conjunction with business conducted with Jensen Precast, any use of Jensen Precast work product without express, written consent is prohibited, and recipient is prohibited from distributing any and all work product to non-approved third parties under penalty of civil action.

DESCRIPTION:	Riser 4242x12 SnoPUD 780777 CASTING DRAWING		REV: B-2
PART NUMBER:	200082415	DRAWN BY:	E.Fine
CREATED:	11/15/2023	MODIFIED:	11/15/2023

SHEET: 2 OF 2

200082415.idw