NOTES
■ FOR COMPLETE DESIGN AND PRODUCT INFORMATION CONTACT JENSEN PRECAST.

BILL OF MATERIALS

ITEM	ITEM QTY	QTY	PART NUMBER	DESCRIPTION
1	1	15.887 ft^3	100011429	CONCRETE MIX GENERIC 7000 PSI
2	4	4	100034833	ANCHOR RAPID LIFT TECH 2.5T CLUTCH 2.4375IN LONG MB RL-25
3	4	96.0000 in	100009575	STRUT C-CHANNEL 1-5/8 X 1-5/8 12GA SLOTTED 304SS
4	4	4	100037074	PULL IRON .5DIA 6 OH X 3W GALV XXX VALLEY NUTBOLT
5	1	1	300154487	REINFORCING MAT 300154487
6	1	1	300154489	REINFORCING MAT 300154489

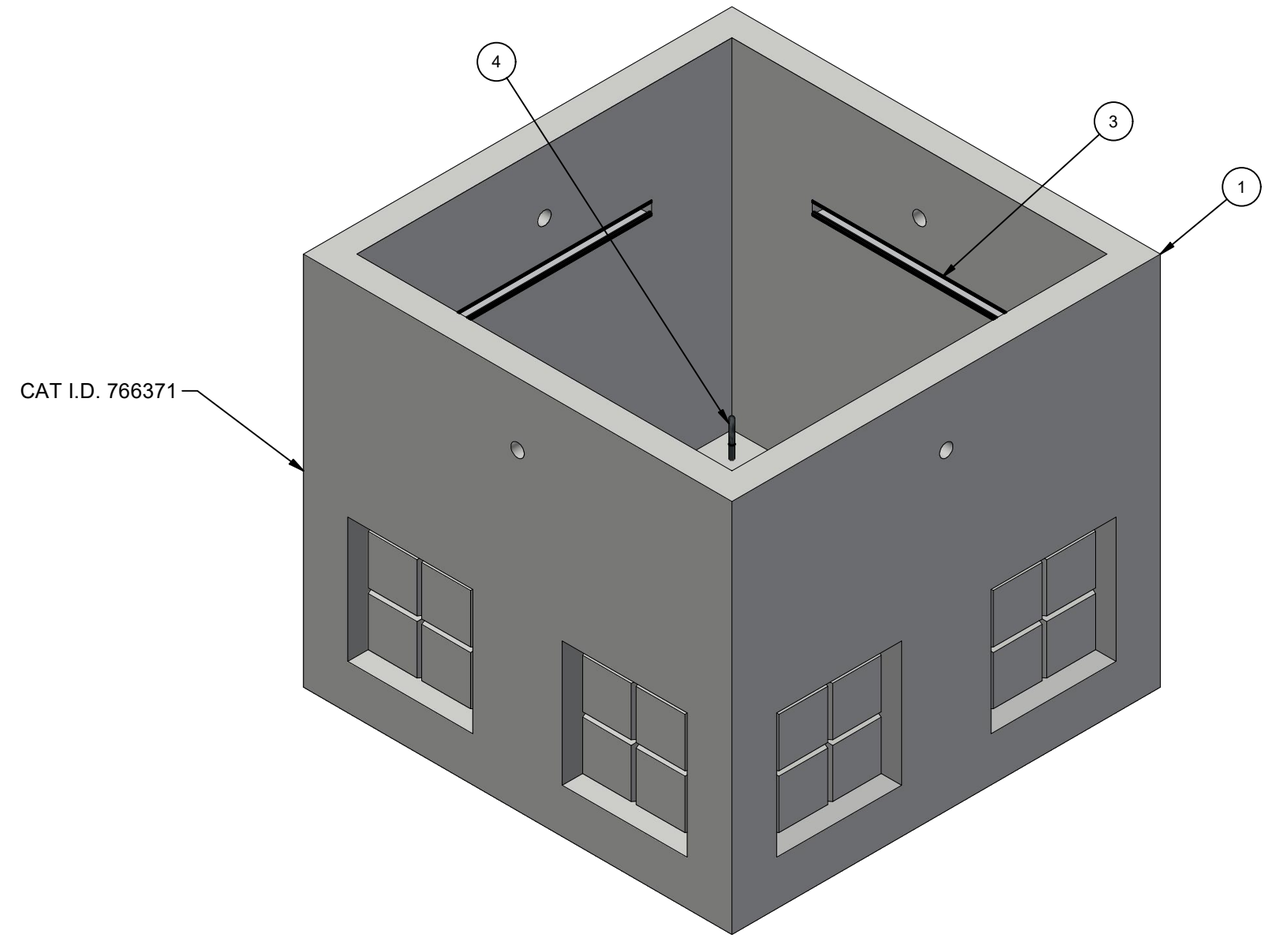

ISO LAYOUT

LIFTING NOTES
■ DEMOLDING: THIS CONCRETE PRODUCT IS DESIGNED TO BE LIFTED AT 2500 PSI WITH 4 LIFT CONNECTIONS EQUALLY LOADED TO 2 LIFTING POINTS AT A MINIMUM 60° SLING ANGLE, MEASURED FROM HORIZONTAL.
■ INSTALLATION: THIS CONCRETE PRODUCT IS DESIGNED TO BE LIFTED AT 3500 PSI WITH 4 LIFT CONNECTIONS EQUALLY LOADED TO 2 LIFTING POINTS AT A MINIMUM 60° SLING ANGLE, MEASURED FROM HORIZONTAL.

REVISION HISTORY			
REV	DESCRIPTION	DATE	BY
A	DRAWING CREATED	11/15/2023	E.Fine

BURY DEPTH:	0.5' - 2.0' to Top		
WATER LEVEL:	5.0'	APPROX. WEIGHT:	2415.6 Lbs
DESIGN SPEC:	ACI 318,ASTM C857	LOADING SPEC:	A-16 (AASHTO HS20-44)
REINFORCEMENT TYPE:	Rebar	LIFTING TYPE:	Lift Hole

JENSEN PRECAST EST. 1968

WWW.JENSENPRECAST.COM

©2024 Jensen Precast- All rights reserved.
All materials appearing as Jensen Precast documents and the like are proprietary work product and are protected under U.S. copyright and other laws.
Unless in conjunction with business conducted with Jensen Precast, any use of Jensen Precast work product without express, written consent is prohibited, and recipient is prohibited from distributing any and all work product to non-approved third parties under penalty of civil action.

DESCRIPTION:	Vault 4242x38 Rect. Bottom Section Knockout Sump SnoPUD 766371 CASTING LAYOUT		REV: A-2
PART NUMBER:	200082406	DRAWN BY:	E.Fine
CREATED:	11/15/2023	MODIFIED:	1/11/2024
			SHEET: 1 OF 2

200082406.idw

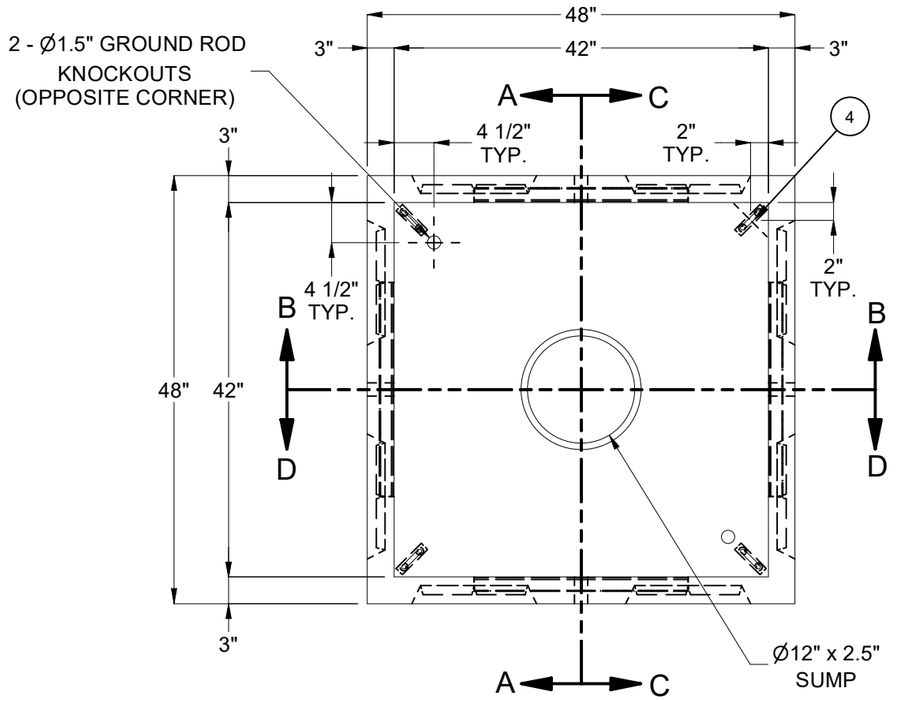

PLAN VIEW

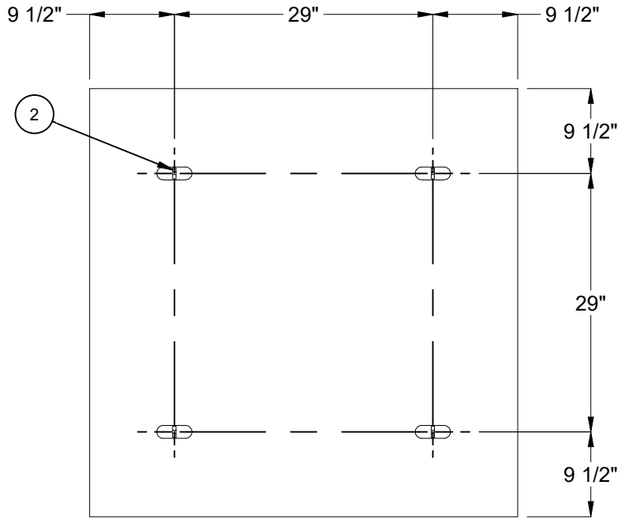

PLAN VIEW
(SHOWING DEMOLDING LIFTERS)

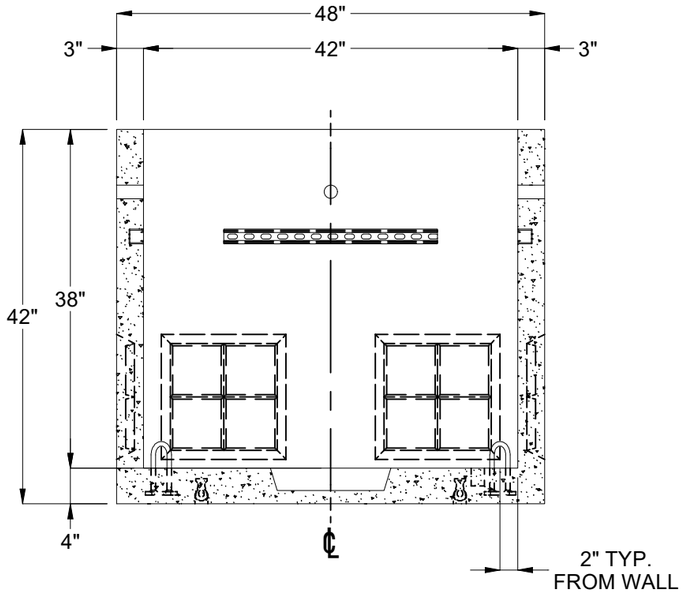

SECTION A-A

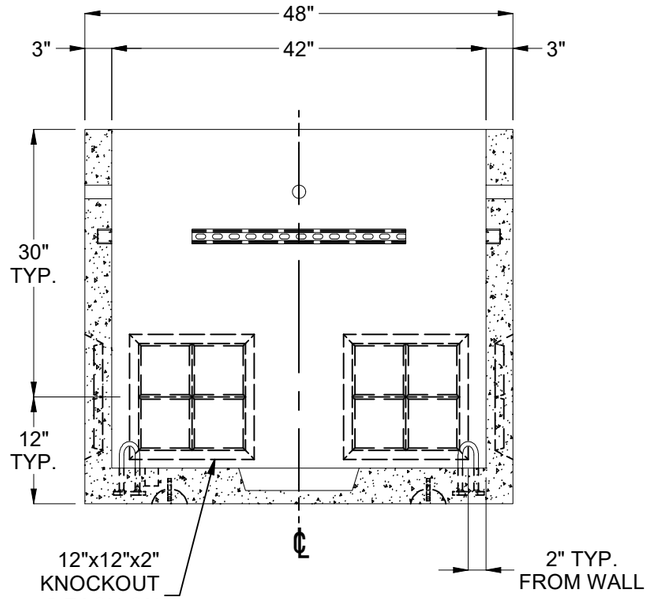

SECTION B-B

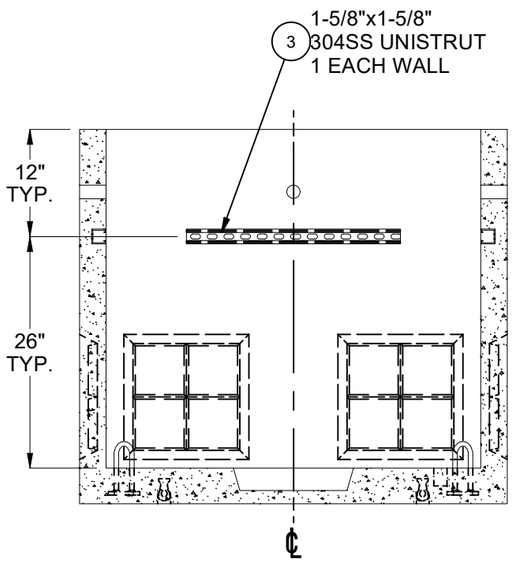

SECTION C-C

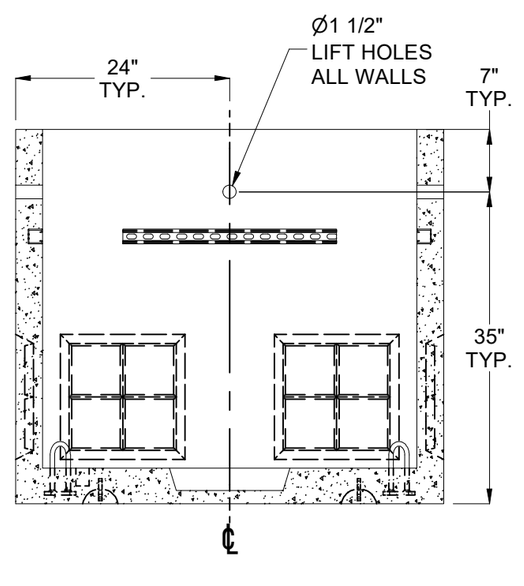

SECTION D-D

BURY DEPTH:	0.5' - 2.0' to Top		
WATER LEVEL:	5.0'	APPROX. WEIGHT:	2415.6 Lbs
DESIGN SPEC:	ACI 318,ASTM C857	LOADING SPEC:	A-16 (AASHTO HS20-44)
REINFORCEMENT TYPE:	Rebar	LIFTING TYPE:	Lift Hole

JENSEN PRECAST EST. 1968

WWW.JENSENPRECAST.COM

©2024 Jensen Precast- All rights reserved.
All materials appearing as Jensen Precast documents and the like are proprietary work product and are protected under U.S. copyright and other laws.
Unless in conjunction with business conducted with Jensen Precast, any use of Jensen Precast work product without express, written consent is prohibited, and recipient is prohibited from distributing any and all work product to non-approved third parties under penalty of civil action.

DESCRIPTION:	Vault 4242x38 Rect. Bottom Section Knockout Sump SnoPUD 766371 CASTING DRAWING		REV: A-2
PART NUMBER:	200082406	DRAWN BY:	E.Fine
CREATED:	11/15/2023	MODIFIED:	1/11/2024
			SHEET: 2 OF 2

200082406.idw