BILL OF MATERIALS

ITEM	ITEM QTY	QTY	PART NUMBER	DESCRIPTION	PART NAME
1	1	1	200081854	DAS1-SD-3333-H4-TRX-G-BD-332	200081854
2	1	1	200071526	PNW HINGE SPRING MOUNT-LEFT	200071526
3	1	1	200071527	PNW HINGE SPRING MOUNT-RIGHT	200071527
4	1	1	200084519	1/2" THK Cam Latch 304SS	200084519
5	2	2	100040068	CUSTOM EXTENSION SPRING:50LB-IN,15.352 IN LNG, .70 OD, .148 WIRE DIA	100040068
6	1	1	100007915	SPRING COMPRESSION 055 X 5/8 X 7/8 LONG	100007915
7	1	1	100007122	BOLT PENTA 1/2-13 UNC 0.875 HEAD 1.5L 304SS	100007122
8	1	1	100007862	HEX NUT NYLOCK - 5/16-18 UNC - 304SS	100007862
21	1	1	200071526	PNW HINGE SPRING MOUNT, 2" DEEP FRAME, LEFT	200071526
22	1	1	200071527	PNW HINGE SPRING MOUNT, 2" DEEP FRAME, RIGHT	200071527
23	1	1	100004002	Hex Bolt 5/16-18 UNC 316SS - PT - 2"	100004002
24	2	0.058 lbmass	100007734	Hinge Doubler Coupling Plate	200092484

ZIP TIE HINGES AND SPRINGS TOGETHER FOR SHIPPING.

PLACE SMALLER ITEMS IN A BAG

ZIP TIE ALL ITEMS TO DOOR

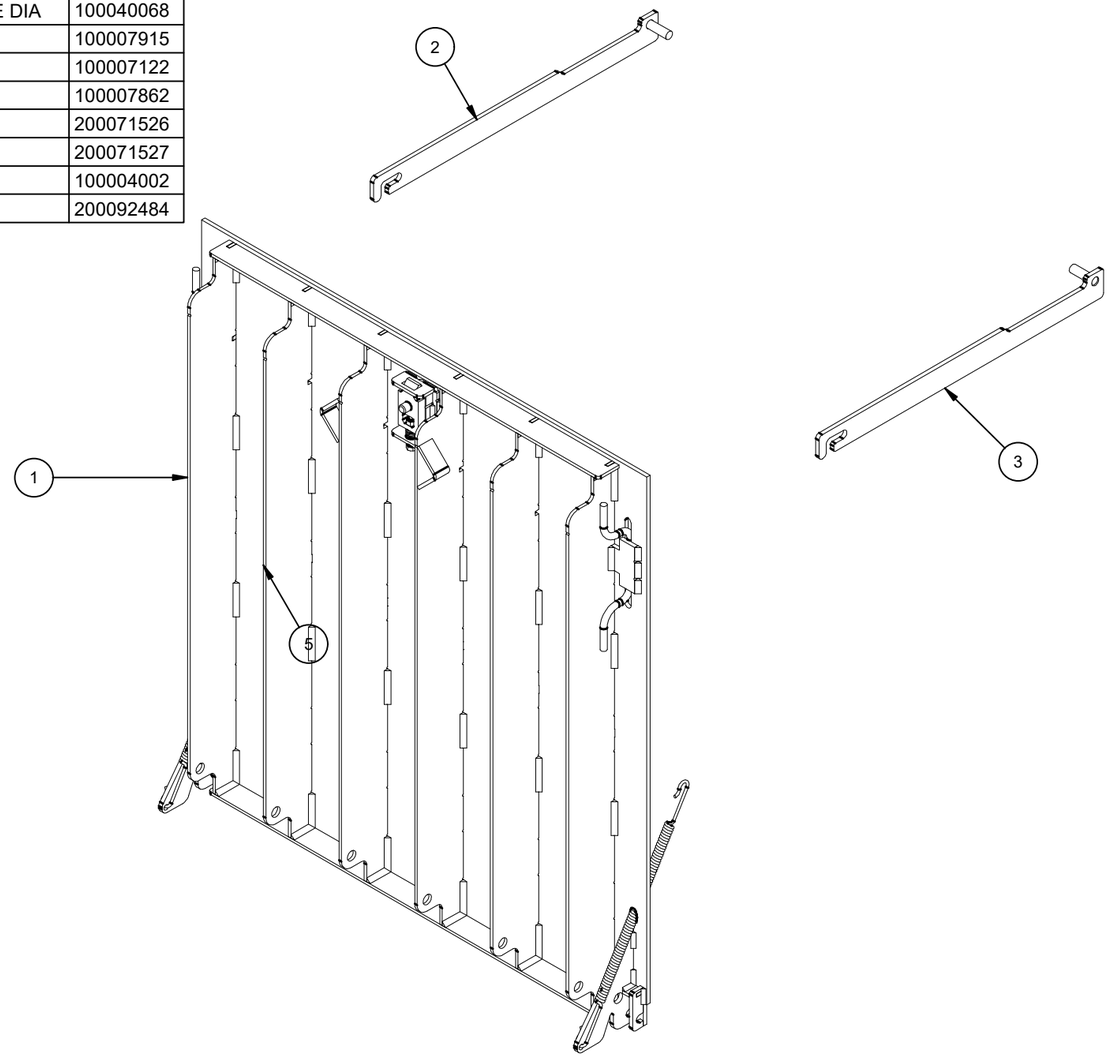

SEE 200082102 FOR COMPLETE COVER ASSEMBLY

200081853.idw

REVISION HISTORY	
DESCRIPTION	DATE
RENAMED TO DOOR ASSEMBLY FOR SIMPLICITY	03/28/2024
NEW BOM, NEW NEST, ADDED MT SLAM LATCH, ADDED GROUNDING HOLES, ADDED NAMEPLATE BRACKET AND NAMEPLATE, ADDING WELD BEADS -- ERM 56285-4	4/15/24

MATERIAL FINISH: Galvanized

MATERIAL SURFACE: TraxPlate™

JENSEN METALTECH
450 E. GLENDALE AVE. SPARKS. NV 89431
775-352-2716 FAX: 755-358-8127
JENSENMETALTECH.COM

©2024 Jensen Precast- All rights reserved. All materials appearing as Jensen Precast documents and the like are proprietary work product and are protected under U.S. copyright and other laws. Unless in conjunction with business conducted with Jensen Precast, any use of Jensen Precast work product without express, written consent is prohibited, and recipient is prohibited from distributing any and all work product to non-approved third parties under penalty of civil action.

PART NUMBER & DESCRIPTION:	200081853 DAS1-SD-3333-H4-TRX-G-BD-PNW-332_With Hardware		REV: B-1
WEIGHT:	142.99 Lbs	DRAWN BY: CNATION	SHEET: 1
CREATED:	10/26/2023	MODIFIED: 10/17/2024	

BILL OF MATERIALS

ITEM	UNIT QTY	QTY	PART NUMBER	DESCRIPTION	PART NAME
1	83.308 lbmass	83.308 lbmass	100007735	Door Component Steel Plate, Top	200081856
2	2.382 lbmass	4.764 lbmass	100007734	Door Component Steel Side Bar	200061801
3	0.894 lbmass	1.788 lbmass	100007735	Door Component Hinge	200071108
4	0.304 lbmass	0.608 lbmass	100007735	Door Component Hinge-Secondary	200071132
5	6.016 lbmass	36.093 lbmass	100007821	Door Component Steel Stiffener, Plate	200061811
6	1	1	200095591	Slam Latch Spacer Plate - 1/2" Thick, Steel	200095591
7	0.506 lbmass	0.506 lbmass	100007734	Slam Latch Retainer	200085963
9	1	2	100007644	LEAF PULL HANDLE A36 3/8IN DIAMETER	100007644
10	1	2	100007641	FRAME LIFTING BRACKET	100007641
11	1	2	100007646	HANDLE RETAINER STL	100007646
8	0.029 lbmass	0.058 lbmass	100007734	Hinge Doubler Coupling Plate	200092484

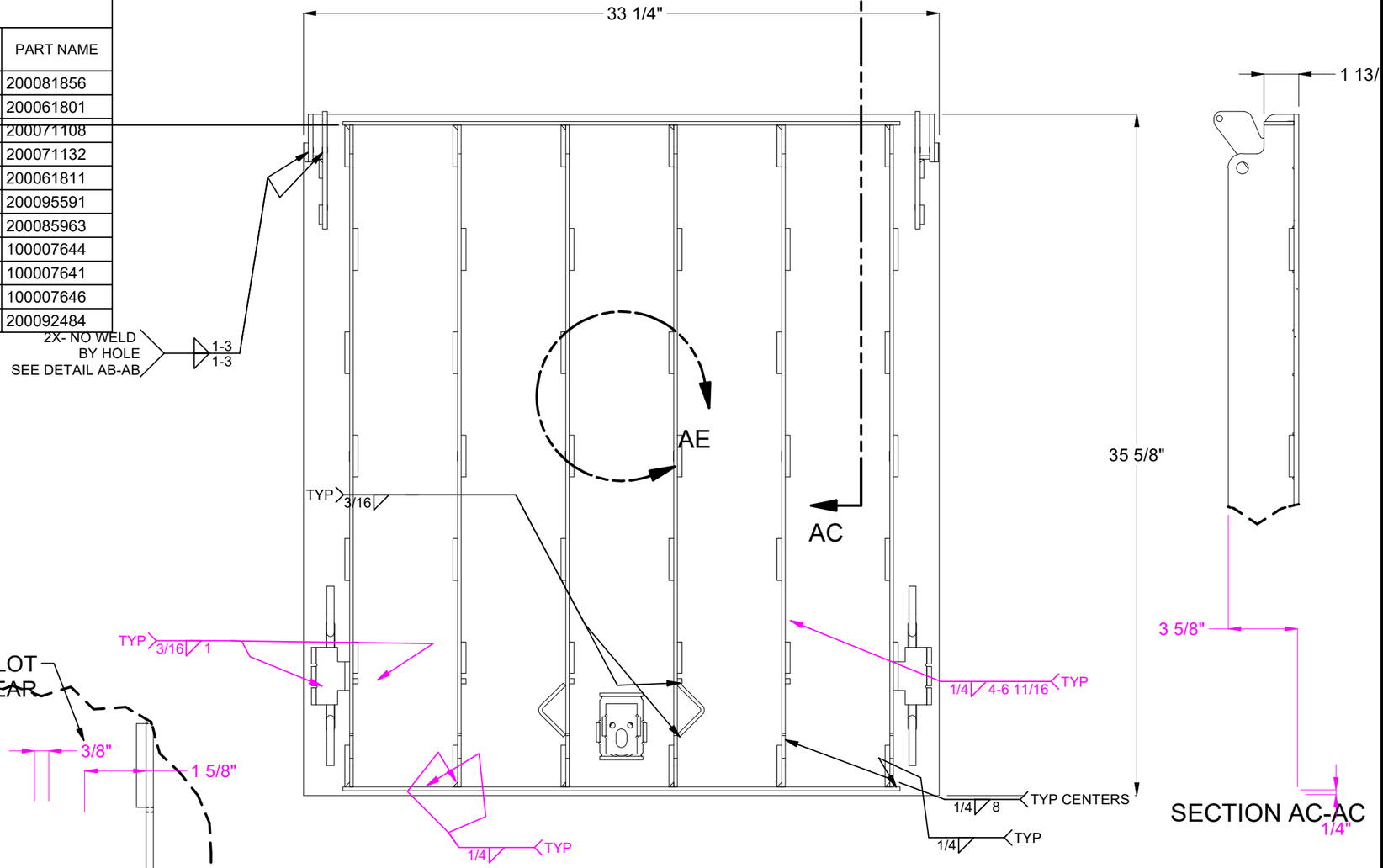

DO NOT WELD BY HINGE HOLE

VIEW AD-AD
SCALE .15

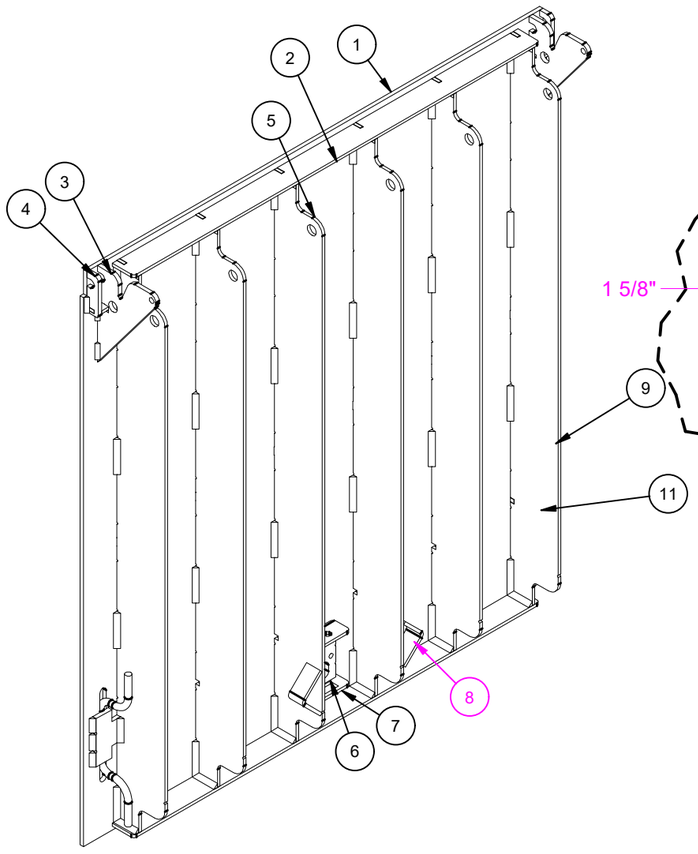

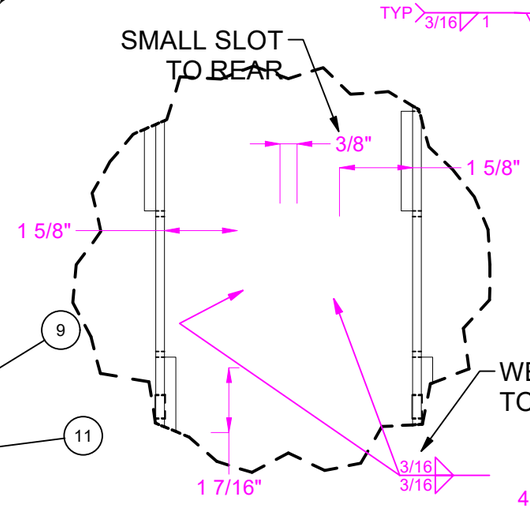

DETAIL AE

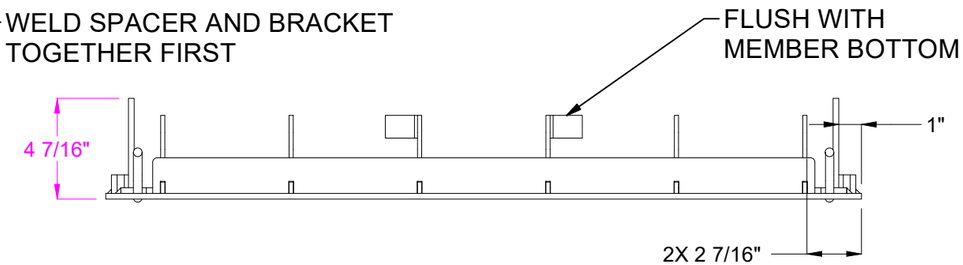

MATERIAL FINISH: Galvanized	JENSEN METALTECH 450 E. GLENDALE AVE. SPARKS. NV 89431 775-352-2716 FAX: 755-358-8127 *JENSENMETALTECH.COM*	©2024 Jensen Precast- All rights reserved. All materials appearing as Jensen Precast documents and the like are proprietary work product and are protected under U.S. copyright and other laws. Unless in conjunction with business conducted with Jensen Precast, any use of Jensen Precast work product without express, written consent is prohibited, and recipient is prohibited from distributing any and all work product to non-approved third parties under penalty of civil action.	PART NUMBER & DESCRIPTION: 200081854 DAS1-SD-3333-HF4-TRX-G-BD-332 / REV: B-1
MATERIAL SURFACE: TraxPlate™			WEIGHT: 129.5 Lbs / DRAWN BY: CNATION / CREATED: 10/26/2023 / MODIFIED: 10/17/2024 / SHEET: 2

BILL OF MATERIALS

ITEM	UNIT QTY	QTY	PART NUMBER	DESCRIPTION	PART NAME
1	1	1	100007735	HINGE PLATE PNW SPRING MOUNT, 2" DEEP FRAME	200071433
2	1.625 in	1.625 in	100003285	STRUCTURAL ROUND BAR A36 STEEL 1/2	100003285

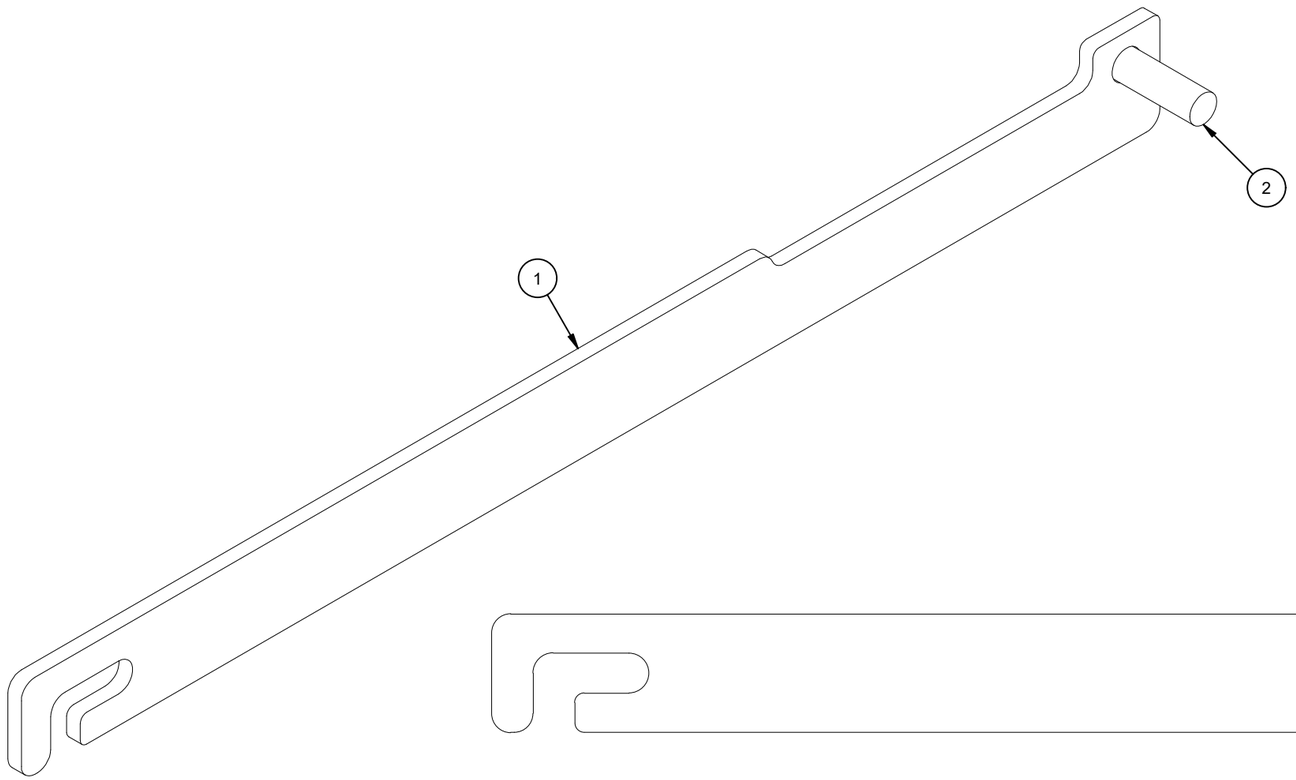

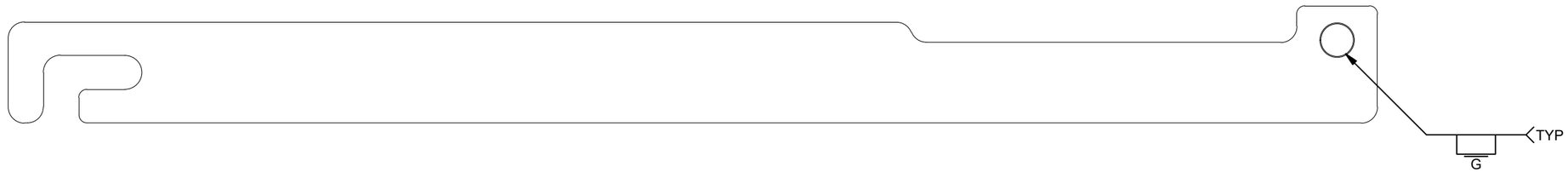

GRIND FLUSH



MATERIAL FINISH: Plated	JENSEN METALTECH 450 E. GLENDALE AVE. SPARKS. NV 89431 775-352-2716 FAX: 755-358-8127 *JENSENMETALTECH.COM*	©2024 Jensen Precast- All rights reserved. All materials appearing as Jensen Precast documents and the like are proprietary work product and are protected under U.S. copyright and other laws. Unless in conjunction with business conducted with Jensen Precast, any use of Jensen Precast work product without express, written consent is prohibited, and recipient is prohibited from distributing any and all work product to non-approved third parties under penalty of civil action.	PART NUMBER & DESCRIPTION: 200071526 PNW HINGE SPRING MOUNT, 2" DEEP FRAME, LEFT	REV: B-1
MATERIAL SURFACE: Smooth			WEIGHT: 2.24 Lbs / DRAWN BY: CNATION	SHEET: 3
			CREATED: 10/26/2023 / MODIFIED: 10/17/2024	

200081853.idw

BILL OF MATERIALS

ITEM	UNIT QTY	QTY	PART NUMBER	DESCRIPTION	PART NAME
1	1	1	100007735	HINGE PLATE PNW SPRING MOUNT, 2" DEEP FRAME	200071433
2	1.625 in	1.625 in	100003285	STRUCTURAL ROUND BAR A36 STEEL 1/2	100003285

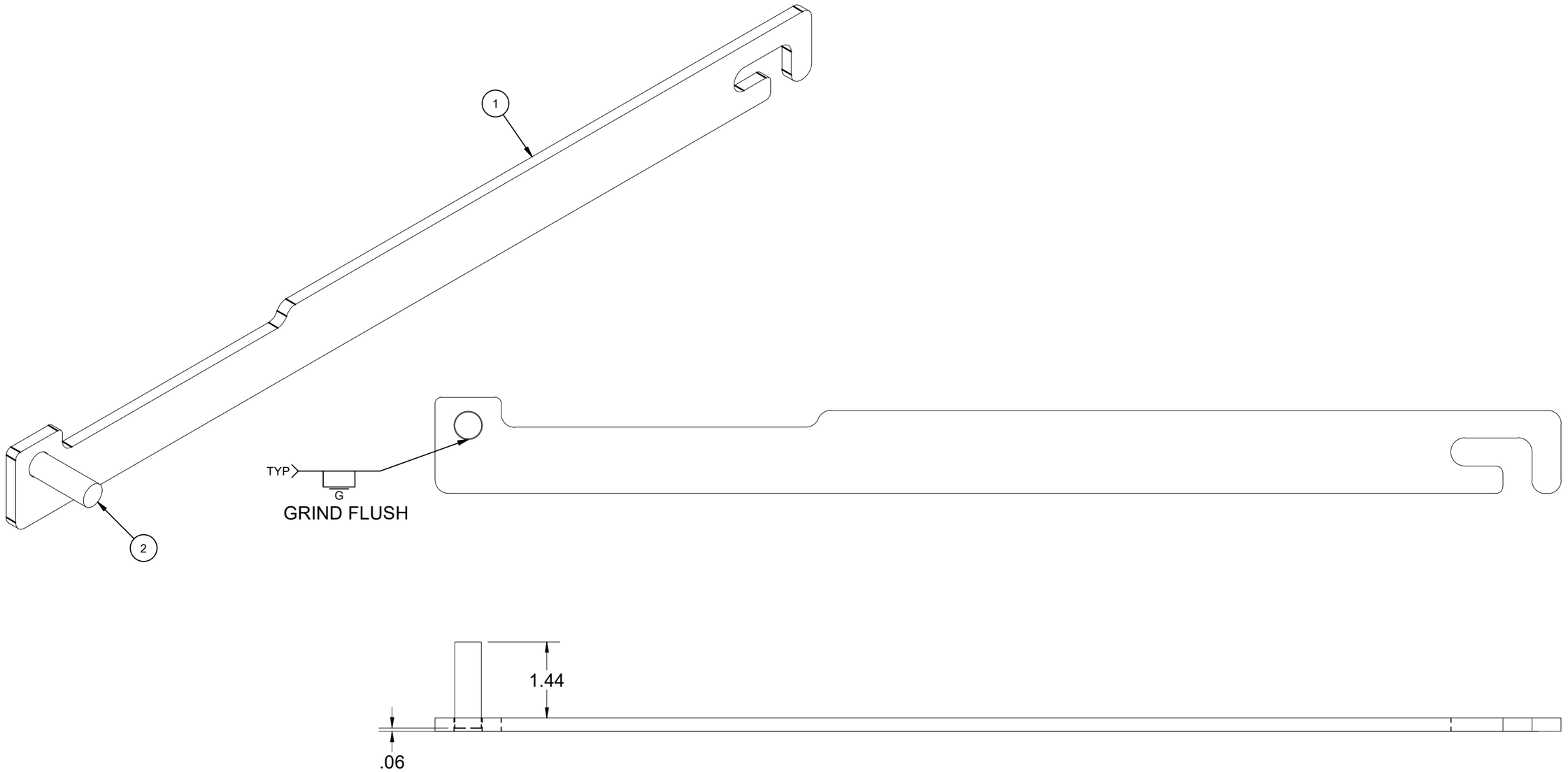

200081853.idw

MATERIAL FINISH: Plated	450 E. GLENDALE AVE. SPARKS. NV 89431 775-352-2716 FAX: 755-358-8127 *JENSENMETALTECH.COM*	©2024 Jensen Precast- All rights reserved. All materials appearing as Jensen Precast documents and the like are proprietary work product and are protected under U.S. copyright and other laws. Unless in conjunction with business conducted with Jensen Precast, any use of Jensen Precast work product without express, written consent is prohibited, and recipient is prohibited from distributing any and all work product to non-approved third parties under penalty of civil action.	PART NUMBER & DESCRIPTION: 200071527 PNW HINGE SPRING MOUNT, 2" DEEP FRAME, RIGHT	REV: B-1
MATERIAL SURFACE: Smooth			WEIGHT: 2.24 Lbs / DRAWN BY: CNATION	SHEET: 4
			CREATED: 10/26/2023 / MODIFIED: 10/17/2024	

BURN LIST - BOM

PART NAME	ITEM QTY	QTY	DESCRIPTION	STOCK NUMBER	MATERIAL	MASS	SHEET
200061801	2	4.764 lbmass	Door Component Steel Side Bar	100007734	STL ASTM A36 SM-HRPO 60X120 RAW .1875	2.382 lbmass	08
200081856	1	83.308 lbmass	Door Component Steel Plate, Top	100007735	STL ASTM A36 SM-HRPO RAW .250	83.347 lbmass	09
200061811	6	36.093 lbmass	Door Component Steel Stiffener, Plate	100007821	SHT STL GR80 SM-HRPO RAW .1875	6.008 lbmass	10
200071108	2	1.788 lbmass	Door Component Hinge	100007735	STL ASTM A36 SM-HRPO RAW .250	0.889 lbmass	11
200071132	2	0.608 lbmass	Door Component Hinge-Secondary	100007735	STL ASTM A36 SM-HRPO RAW .250	0.123 lbmass	12
200085963	1	0.506 lbmass	Slam Latch Retainer	100007734	STL ASTM A36 SM-HRPO 60X120 RAW .1875	0.506 lbmass	13
200092484	2	0.058 lbmass	Hinge Doubler Coupling Plate	100007734	STL ASTM A36 SM-HRPO 60X120 RAW .1875	0.029 lbmass	

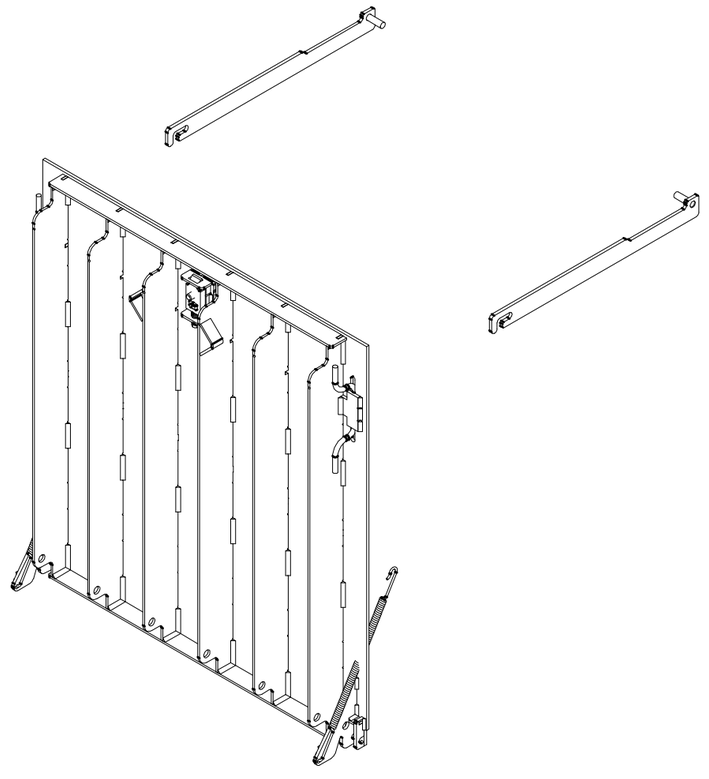

200081853.idw

MATERIAL FINISH: Galvanized

MATERIAL SURFACE: TraxPlate™

JENSEN METALTECH
450 E. GLENDALE AVE. SPARKS. NV 89431
775-352-2716 FAX: 755-358-8127
JENSENMETALTECH.COM

©2024 Jensen Precast- All rights reserved.
All materials appearing as Jensen Precast documents and the like are proprietary work product and are protected under U.S. copyright and other laws.
Unless in conjunction with business conducted with Jensen Precast, any use of Jensen Precast work product without express, written consent is prohibited, and recipient is prohibited from distributing any and all work product to non-approved third parties under penalty of civil action.

PART NUMBER & DESCRIPTION: 200081853 DAS1-SD-3333-H4-TRX-G-BD-PNW-332_With Hardware

REV: B-1

WEIGHT: 142.99 Lbs

DRAWN BY: CNATION

CREATED: 10/26/2023

MODIFIED: 10/17/2024

SHEET: 5

CUT LIST - BOM

PART NAME	PART NUMBER	ITEM QTY	BASE QTY	QTY	DESCRIPTION	Material IFS #	MATERIAL IFS DESCRIPTION	MASS	SHEET
100007646	100007646	2	1	2	HANDLE RETAINER STL			0.308 lbmass	
200099056	100007734	1	0.27660238 lbmass	0.277 lbmass	SLAM LATCH CATCH FOR 2" FRAMES - PNW			0.277 lbmass	
100007728	100007728	4	1	4	NUT SELF-CLINCH 1/2-13 S-0813-1 RAW			0.040 lbmass	
100040068	100040068	2	1	2	CUSTOM EXTENSION SPRING:50LB-IN,15.352 IN LNG, .70 OD, .148 WIRE DIA			0.472 lbmass	
200084519	200084519	1	1	1	1/2" THK Cam Latch 304SS			0.453 lbmass	
200085963	100007734	1	0.50550326 lbmass	0.506 lbmass	Slam Latch Retainer			0.506 lbmass	
100007733	100007733	2	1	2	Bolt Socket Flat Countersunk Head - 1/2-13 UNC - Grade 5 - Zinc - FT - 1"			0.065 lbmass	
100003484	100003484	2	1	2	Hex Bolt 1/2-13 UNC ZINC - FT - 0.75"			0.092 lbmass	
100003285	100003285	2	1.6250 in	3.250 in	STRUCTURAL ROUND BAR A36 STEEL 1/2	100003285	STRUCTURAL ROUND BAR A36 STEEL 1/2 - 0.01	0.0905 lbmass	
100004002	100004002	1	1	1	Hex Bolt 5/16-18 UNC 316SS - PT - 2"			0.060 lbmass	
100007423	100007423	1	1	1	NAME PLATE RAW			1.530 lbmass	
200099053	100007734	2	0.85958321 lbmass	1.719 lbmass	Frame Component Steel Skirt Extension			0.860 lbmass	
100007749	100007749	1	1	1	BOLT PENTA 1/2-13 UNC 0.875 HEAD 2.25L SS DRILLED			0.179 lbmass	
100007729	100007729	1	1	1	HEX NUT SLOTTED CASTLE HEAD 1/2-13 SS			0.036 lbmass	
	100007918	1	1	1	COTTER PIN 0.094DIA X 1-1/4			0.003 lbmass	
200092484	100007734	2	0.02908008 lbmass	0.058 lbmass	Hinge Doubler Coupling Plate			0.029 lbmass	

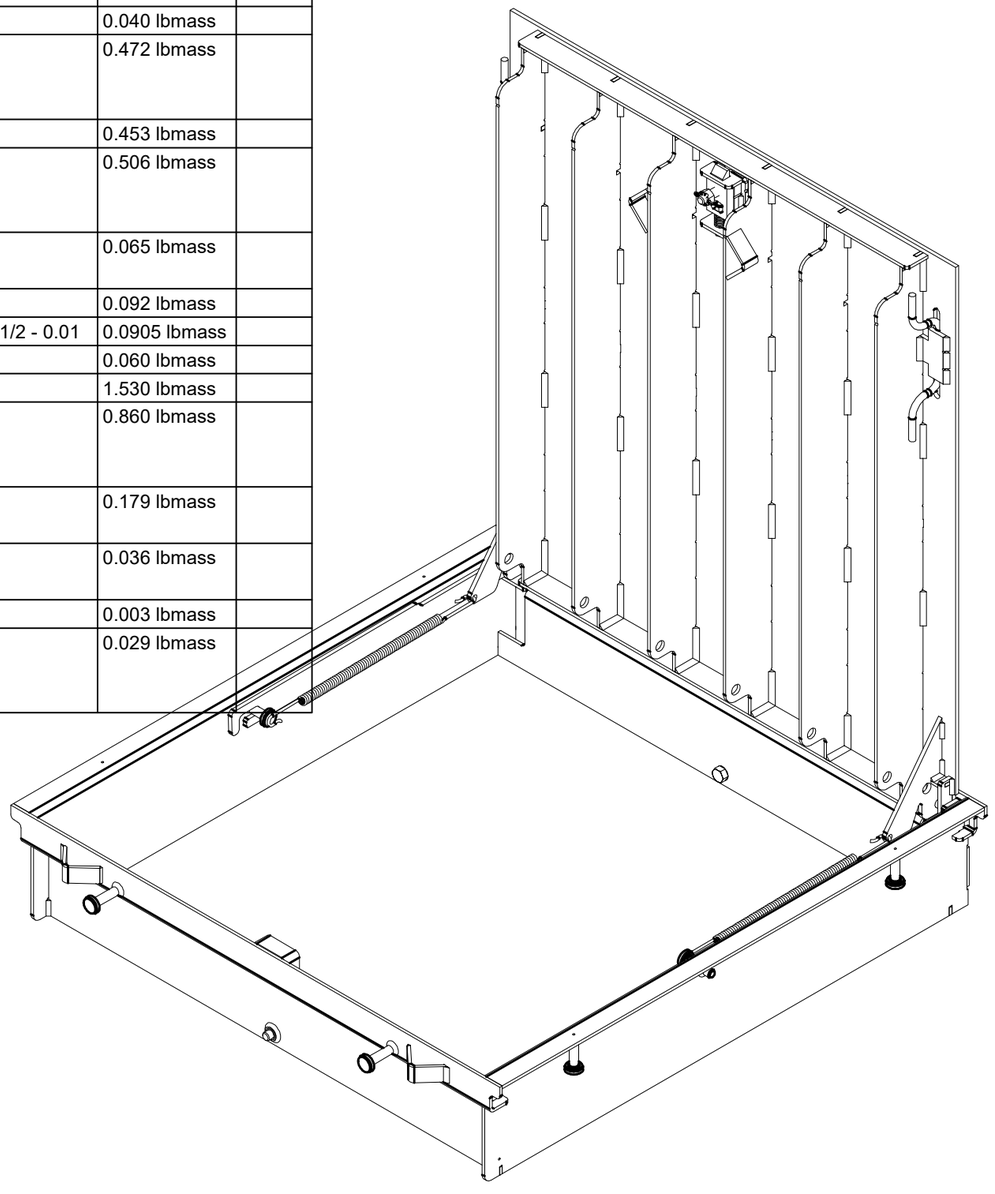

200081853.idw

MATERIAL FINISH: Galvanized

MATERIAL SURFACE: TraxPlate™

JENSEN METALTECH
450 E. GLENDALE AVE. SPARKS. NV 89431
775-352-2716 FAX: 755-358-8127
JENSENMETALTECH.COM

©2024 Jensen Precast- All rights reserved. All materials appearing as Jensen Precast documents and the like are proprietary work product and are protected under U.S. copyright and other laws.
Unless in conjunction with business conducted with Jensen Precast, any use of Jensen Precast work product without express, written consent is prohibited, and recipient is prohibited from distributing any and all work product to non-approved third parties under penalty of civil action.

PART NUMBER & DESCRIPTION: 200082102 CAS1-3333-CHF4-TRX-G-BD-GR-SL-PNW-OH07-332

REV: B-1

WEIGHT: 204.37 Lbs

DRAWN BY: CNATION

CREATED: 10/26/2023

MODIFIED: 10/17/2024

SHEET: 6

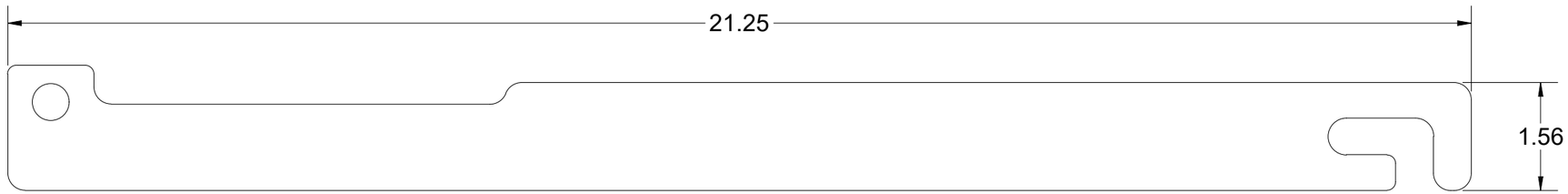

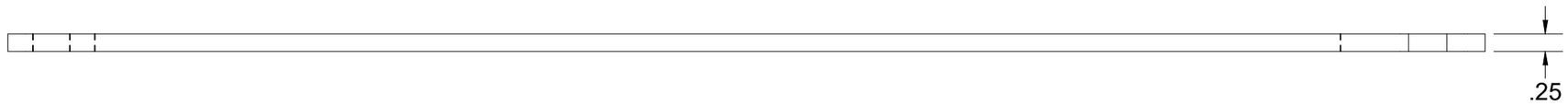

BEND TABLE				MATERIAL IFS: 100007735
BEND RADIUS	V-OPENING	BEND ANGLE	BEND DEDUCTION	MATERIAL THK: 0.25
-	-	-	-	MAT DESCRIPTION: STL ASTM A36 SM-HRPO RAW .250

JENSEN METALTECH
450 E. GLENDALE AVE. SPARKS. NV 89431
775-352-2716 FAX: 755-358-8127
JENSENMETALTECH.COM

©2024 Jensen Precast- All rights reserved.
All materials appearing as Jensen Precast documents and the like are proprietary work product and are protected under U.S. copyright and other laws.
Unless in conjunction with business conducted with Jensen Precast, any use of Jensen Precast work product without express, written consent is prohibited, and recipient is prohibited from distributing any and all work product to non-approved third parties under penalty of civil action.

NAME & DESCRIPTION: 200071433 HINGE PLATE PNW SPRING MOUNT, 2" DEEP FRAME		REV: B-1
WEIGHT: 2.153 lbmass	DRAWN BY: CNATION	SHEET: 7 OF 13
CREATED: 10/26/2023	MODIFIED: 10/17/2024	

200081853.idw

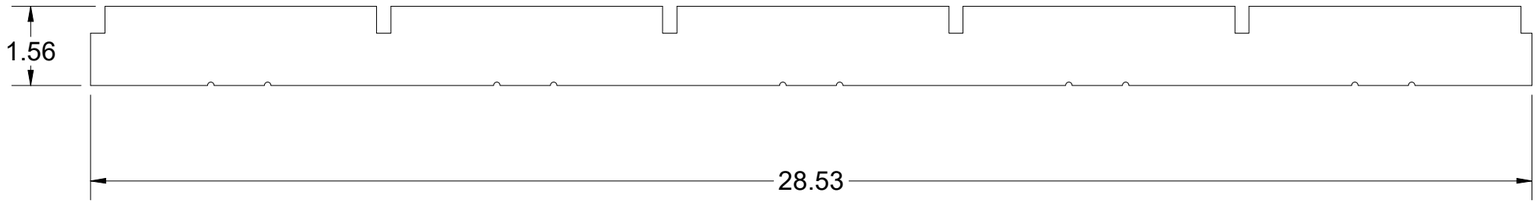

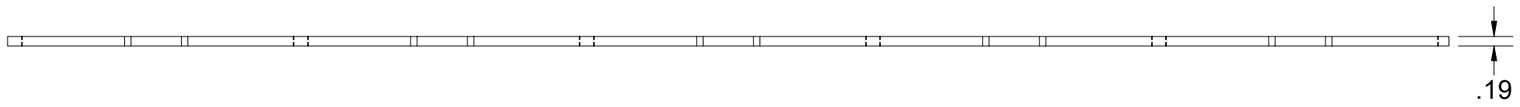

BEND TABLE				MATERIAL IFS: 100007734
BEND RADIUS	V-OPENING	BEND ANGLE	BEND DEDUCTION	MATERIAL THK: 0.1875
-	-	-	-	MAT DESCRIPTION: STL ASTM A36 SM-HRPO 60X120 RAW .1875

JENSEN METALTECH
450 E. GLENDALE AVE. SPARKS. NV 89431
775-352-2716 FAX: 755-358-8127
JENSENMETALTECH.COM

©2024 Jensen Precast- All rights reserved.
All materials appearing as Jensen Precast documents and the like are proprietary work product and are protected under U.S. copyright and other laws.
Unless in conjunction with business conducted with Jensen Precast, any use of Jensen Precast work product without express, written consent is prohibited, and recipient is prohibited from distributing any and all work product to non-approved third parties under penalty of civil action.

NAME & DESCRIPTION: 200081855 Door Component Steel Side Bar		REV: B-1
WEIGHT: 2.322 lbmass	DRAWN BY: CNATION	SHEET: 8 OF 13
CREATED: 10/26/2023	MODIFIED: 10/17/2024	

200081853.idw

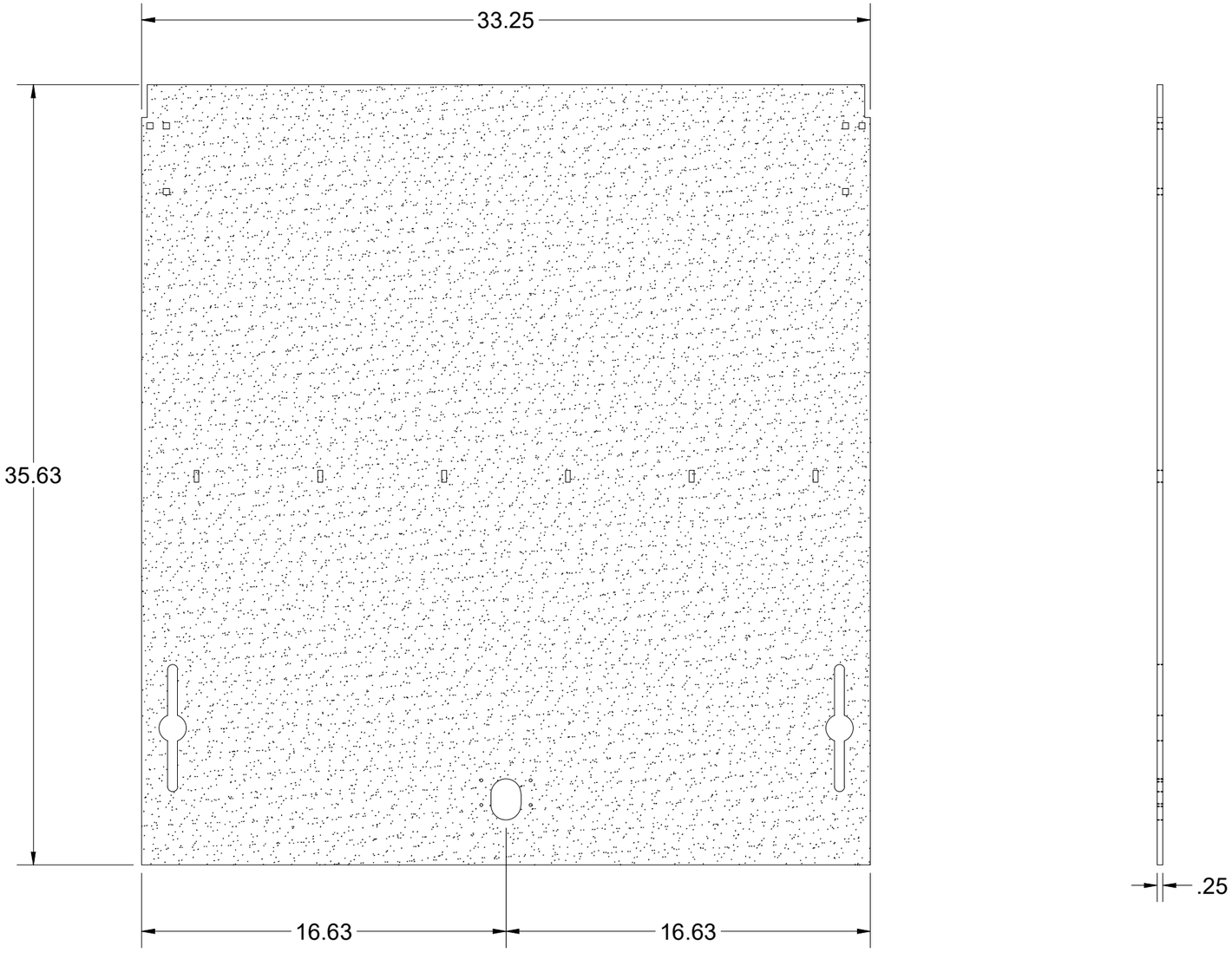

200081853.idw

BEND TABLE				MATERIAL IFS: 100007735
BEND RADIUS	V-OPENING	BEND ANGLE	BEND DEDUCTION	MATERIAL THK: 0.25
-	-	-	-	MAT DESCRIPTION: STL ASTM A36 SM-HRPO RAW .250

JENSEN METALTECH
450 E. GLENDALE AVE. SPARKS. NV 89431
775-352-2716 FAX: 755-358-8127
JENSENMETALTECH.COM

©2024 Jensen Precast- All rights reserved.
All materials appearing as Jensen Precast documents and the like are proprietary work product and are protected under U.S. copyright and other laws.
Unless in conjunction with business conducted with Jensen Precast, any use of Jensen Precast work product without express, written consent is prohibited, and recipient is prohibited from distributing any and all work product to non-approved third parties under penalty of civil action.

NAME & DESCRIPTION: 200081856 Door Component Steel Plate, Top		REV: B-1
WEIGHT: 83.347 lbmass	DRAWN BY: CNATION	SHEET: 9 OF 13
CREATED: 10/26/2023	MODIFIED: 10/17/2024	

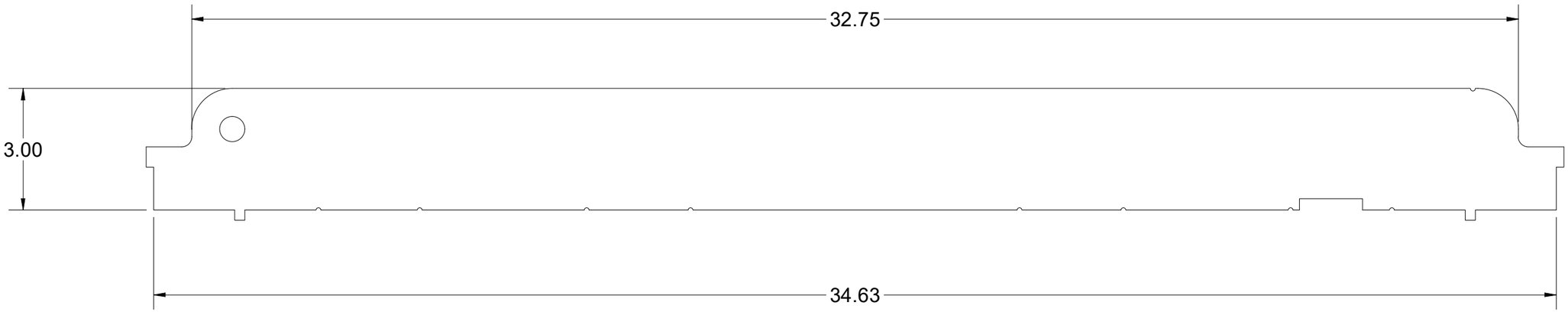



BEND TABLE				MATERIAL IFS: 100007820
BEND RADIUS	V-OPENING	BEND ANGLE	BEND DEDUCTION	MATERIAL THK: 0.25
-	-	-	-	MAT DESCRIPTION: SHT STL GR80 SM-HR RAW .25

JENSEN METALTECH
450 E. GLENDALE AVE. SPARKS. NV 89431
775-352-2716 FAX: 755-358-8127
JENSENMETALTECH.COM

©2024 Jensen Precast- All rights reserved.
All materials appearing as Jensen Precast documents and the like are proprietary work product and are protected under U.S. copyright and other laws.
Unless in conjunction with business conducted with Jensen Precast, any use of Jensen Precast work product without express, written consent is prohibited, and recipient is prohibited from distributing any and all work product to non-approved third parties under penalty of civil action.

NAME & DESCRIPTION: 200081857 Door Component Steel Stiffener, Plate		REV: B-1
WEIGHT: 7.111 lbmass	DRAWN BY: CNATION	SHEET: 10 OF 13
CREATED: 10/26/2023	MODIFIED: 10/17/2024	

200081853.idw

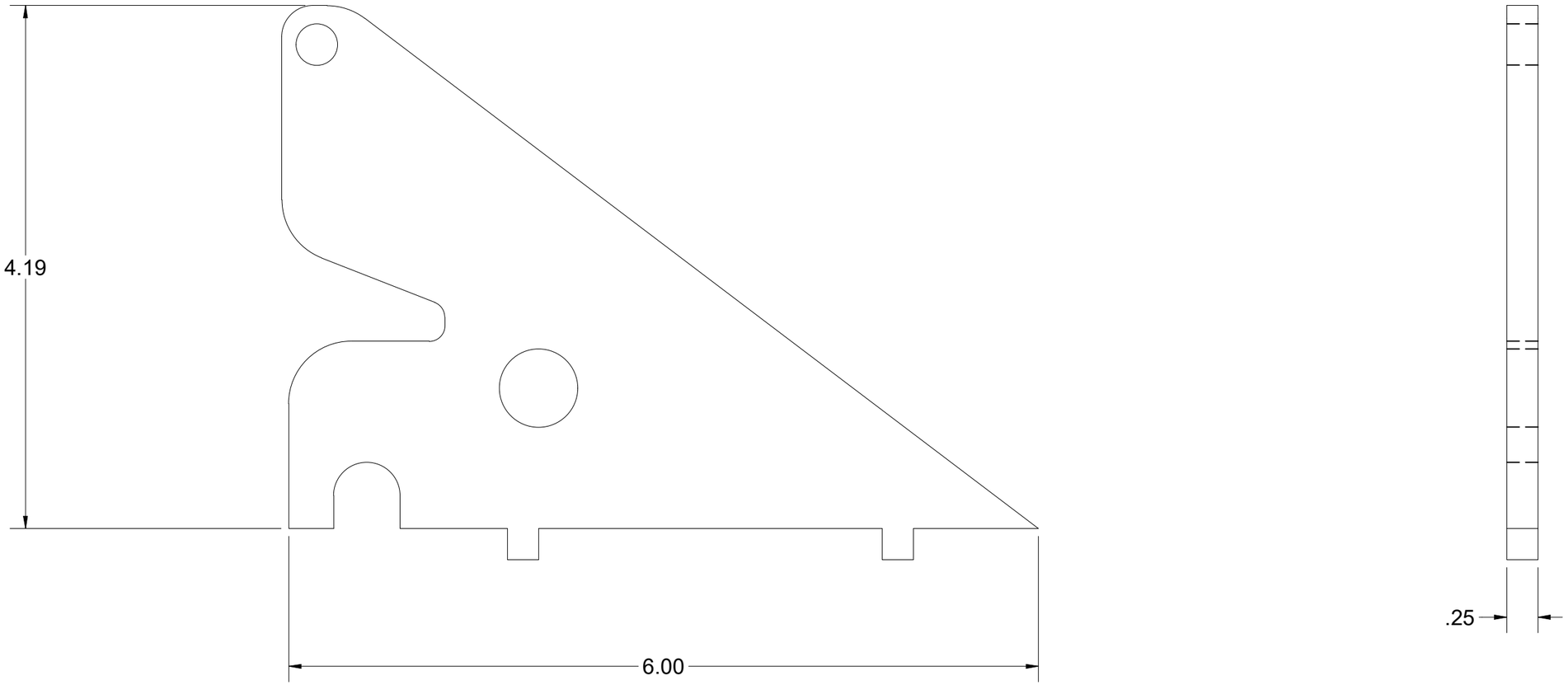

200081853.idw

BEND TABLE				MATERIAL IFS: 100007735	JENSEN METALTECH 450 E. GLENDALE AVE. SPARKS. NV 89431 775-352-2716 FAX: 755-358-8127 *JENSENMETALTECH.COM*	©2024 Jensen Precast- All rights reserved. All materials appearing as Jensen Precast documents and the like are proprietary work product and are protected under U.S. copyright and other laws. Unless in conjunction with business conducted with Jensen Precast, any use of Jensen Precast work product without express, written consent is prohibited, and recipient is prohibited from distributing any and all work product to non-approved third parties under penalty of civil action.	NAME & DESCRIPTION: 200081858 Door Component Hinge		REV: B-1
BEND RADIUS	V-OPENING	BEND ANGLE	BEND DEDUCTION	MATERIAL THK: 0.25					
-	-	-	-	MAT DESCRIPTION: STL ASTM A36 SM-HRPO RAW .250			WEIGHT: 0.881 lbmass	DRAWN BY: CNATION	SHEET: 11 OF 13
							CREATED: 10/26/2023	MODIFIED: 10/17/2024	

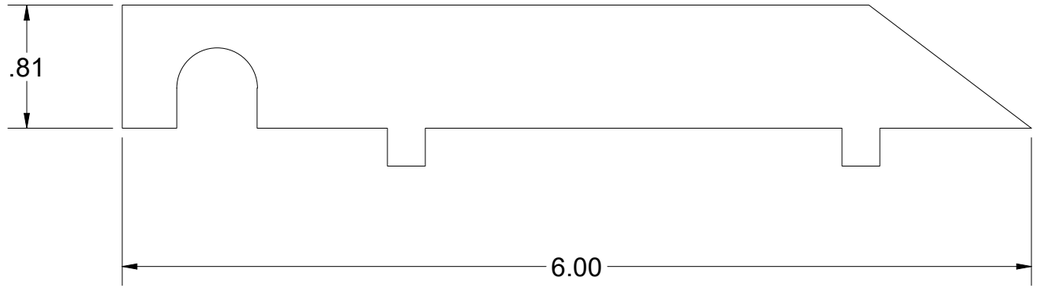

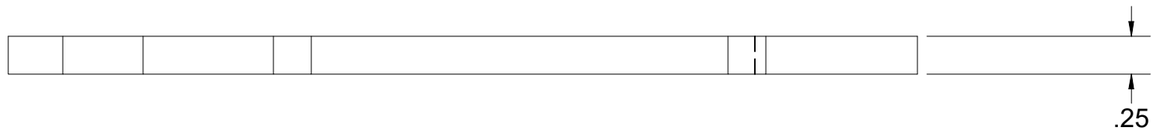

BEND TABLE				MATERIAL IFS: 100007735
BEND RADIUS	V-OPENING	BEND ANGLE	BEND DEDUCTION	MATERIAL THK: 0.25
-	-	-	-	MAT DESCRIPTION: STL ASTM A36 SM-HRPO RAW .250

JENSEN METALTECH
450 E. GLENDALE AVE. SPARKS. NV 89431
775-352-2716 FAX: 755-358-8127
JENSENMETALTECH.COM

©2024 Jensen Precast- All rights reserved.
All materials appearing as Jensen Precast documents and the like are proprietary work product and are protected under U.S. copyright and other laws.
Unless in conjunction with business conducted with Jensen Precast, any use of Jensen Precast work product without express, written consent is prohibited, and recipient is prohibited from distributing any and all work product to non-approved third parties under penalty of civil action.

NAME & DESCRIPTION:	200081859 Door Component Hinge-Secondary	REV: B-1
WEIGHT: 0.306 lbmass	DRAWN BY: CNATION	SHEET: 12 OF 13
CREATED: 10/26/2023	MODIFIED: 10/17/2024	

200081853.idw

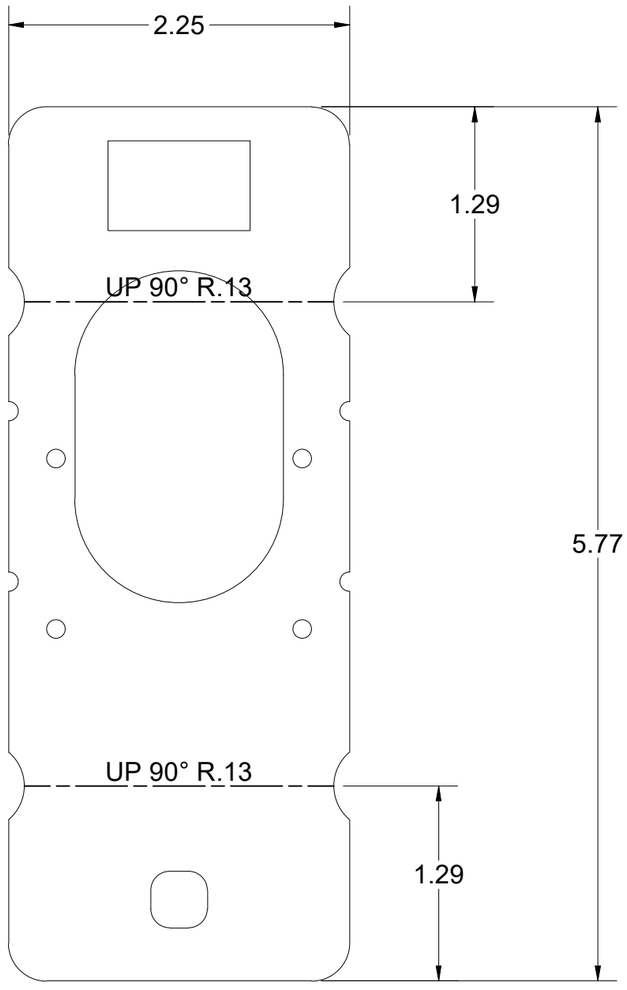

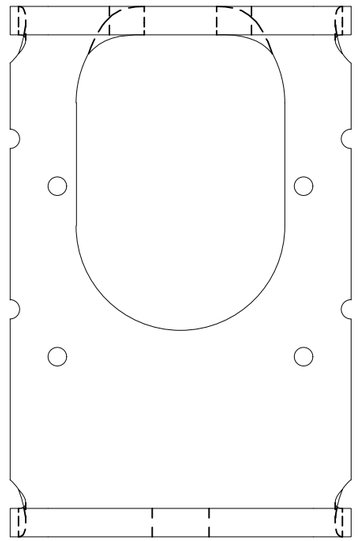

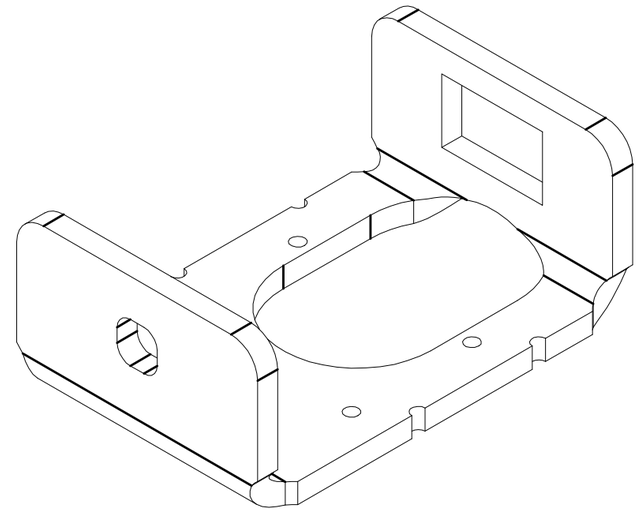

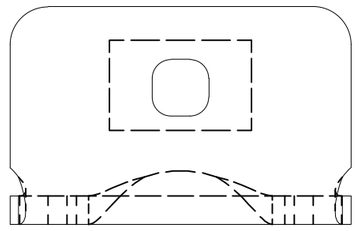

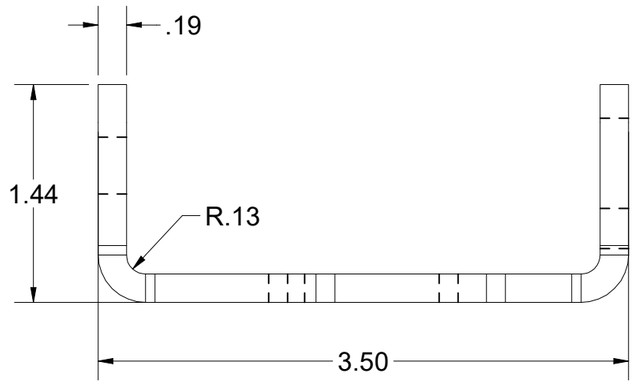

200081853.idw

BEND TABLE				MATERIAL IFS: 100007734			
BEND RADIUS	V-OPENING	BEND ANGLE	BEND DEDUCTION	MATERIAL THK: 0.1875			
0.125	0.75	90	0.3040	MAT DESCRIPTION: STL ASTM A36 SM-HRPO 60X120 RAW .1875			

JENSEN METALTECH
450 E. GLENDALE AVE. SPARKS. NV 89431
775-352-2716 FAX: 755-358-8127
JENSENMETALTECH.COM

©2024 Jensen Precast- All rights reserved.
All materials appearing as Jensen Precast documents and the like are proprietary work product and are protected under U.S. copyright and other laws.
Unless in conjunction with business conducted with Jensen Precast, any use of Jensen Precast work product without express, written consent is prohibited, and recipient is prohibited from distributing any and all work product to non-approved third parties under penalty of civil action.

NAME & DESCRIPTION: 200085963 Slam Latch Retainer		REV: B-1
WEIGHT: 0.506 lbmass	DRAWN BY: CNATION	SHEET: 13 OF 13
CREATED: 10/26/2023	MODIFIED: 10/17/2024	