NOTES
■ DESIGNED IN ACCORDANCE WITH AASHTO HS20-44 TRAFFIC BRIDGE LOADING USING 4,000 PSI COMPRESSIVE STRENGTH CONCRETE AND 60,000 PSI YIELD STRENGTH ASTM A-706 STEEL REINFORCEMENT.
■ ALL PARTS TO BE STENCILED: MFG DATE / JOB NUMBER / PRODUCT ID / WEIGHT.

BILL OF MATERIALS

ITEM	UNIT QTY	QTY	PART NUMBER	DESCRIPTION
1	16.726 ft^3	16.726 ft^3	100043269	CONCRETE 4000 PSI WETCAST SITE-112
2	1	2	100043239	LADDER STEP RUNG 8.5x13IN PP CAST-IN
3	1	1	200081212	REINFORCING MAT 200081212
4	1	3	100002867	ANCHOR DOGBONE P52 2T X 3-3/8" GALV

200081211.idw

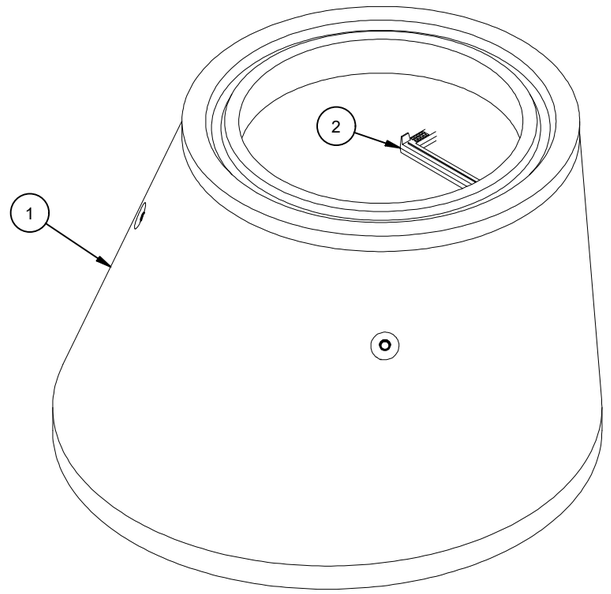

ISO VIEW

LIFTING NOTES
■ INSTALLATION: THIS CONCRETE PRODUCT IS DESIGNED TO BE LIFTED AT 4000 PSI WITH 3 LIFT CONNECTIONS EQUALLY LOADED TO 3 LIFTING POINTS AT A MINIMUM 60° SLING ANGLE, MEASURED FROM HORIZONTAL.
■ DEMOLDING: THIS CONCRETE PRODUCT IS DESIGNED TO BE LIFTED AT 2500 PSI WITH 3 LIFT CONNECTIONS EQUALLY LOADED TO 3 LIFTING POINTS AT A MINIMUM 60° SLING ANGLE, MEASURED FROM HORIZONTAL.
*All rigging shall be design by a qualified professional. Loading diagrams show illustrations of possible rigging setups to achieve the required sling angle and load leg equalization. Other valid rigging configurations are possible. A qualified professional must be consulted prior to lifting.

RIGGING DIAGRAMS*

INSTALLATION	A	DEMOLDING	A
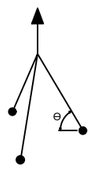		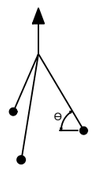	

BURY DEPTH:	0.0' - 2.0' to Top		
WATER LEVEL:	Below Structure	APPROX. WEIGHT:	2547.94 Lbs
DESIGN SPEC:	ACI 318,ASTM C478	LOADING SPEC:	A-16 (AASHTO HS20-44)
REINFORCEMENT TYPE:	Deformed Wire	LIFTING TYPE:	Dogbone

Infrastructure
JENSEN
WWW.JENSENINFRASTRUCTURE.COM

©2026 Jensen Infrastructure - All rights reserved.
All materials appearing as Jensen Infrastructure documents and the like are proprietary work product and are protected under U.S. copyright and other laws.
Unless in conjunction with business conducted with Jensen Infrastructure , any use of Jensen Infrastructure work product without express, written consent is prohibited, and recipient is prohibited from distributing any and all work product to non-approved third parties under penalty of civil action.
This product shall only be produced in a Jensen Infrastructure facility.

REVISION HISTORY

REV	DESCRIPTION	DATE	APPROVED
B-1	UPDATED CONCRETE MIX	5/29/2026	

DESCRIPTION:	Manhole Cone Eccentric D4858 to D30x36IN Cast-In Steps-PP CASTING LAYOUT		REV: B-1
PART NUMBER:	200081211	DRAWN BY:	S. Rodarte
CREATED:	7/9/2025	MODIFIED:	5/29/2026
			SHEET: 1 OF 2

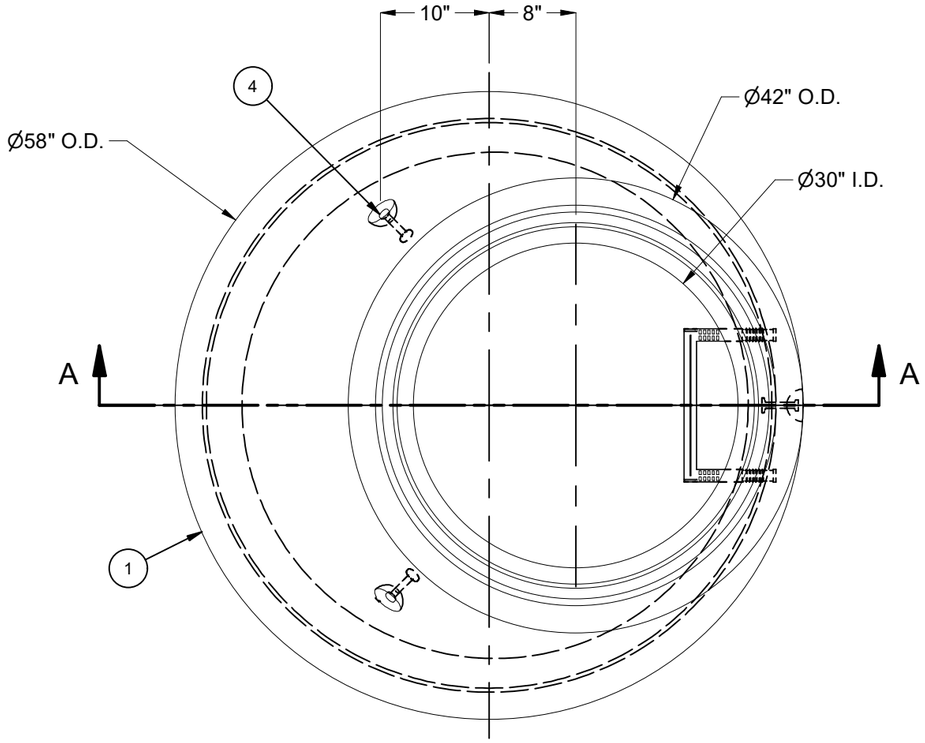

PLAN VIEW

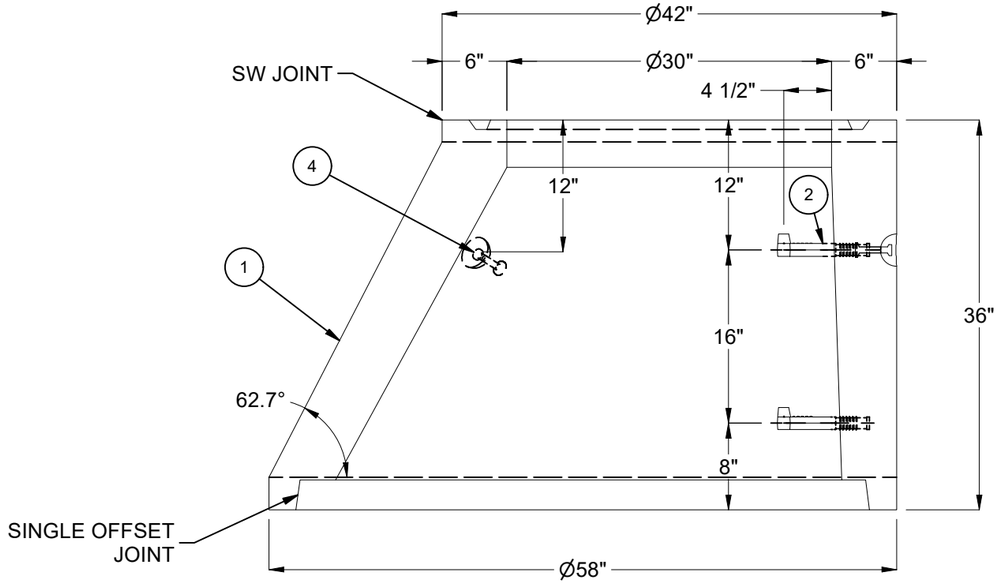

SECTION A-A

200081211.idw

BURY DEPTH:	0.0' - 2.0' to Top		
WATER LEVEL:	Below Structure	APPROX. WEIGHT:	2547.94 Lbs
DESIGN SPEC:	ACI 318,ASTM C478	LOADING SPEC:	A-16 (AASHTO HS20-44)
REINFORCEMENT TYPE:	Deformed Wire	LIFTING TYPE:	Dogbone

Infrastructure
JENSEN
WWW.JENSENINFRASTRUCTURE.COM

©2026 Jensen Infrastructure - All rights reserved.
All materials appearing as Jensen Infrastructure documents and the like are proprietary work product and are protected under U.S. copyright and other laws.
Unless in conjunction with business conducted with Jensen Infrastructure , any use of Jensen Infrastructure work product without express, written consent is prohibited, and recipient is prohibited from distributing any and all work product to non-approved third parties under penalty of civil action.
This product shall only be produced in a Jensen Infrastructure facility.

DESCRIPTION:	Manhole Cone Eccentric D4858 to D30x36IN Cast-In Steps-PP CASTING DRAWING		REV: B-1
PART NUMBER:	200081211	DRAWN BY:	S. Rodarte
CREATED:	7/9/2025	MODIFIED:	5/29/2026
			SHEET: 2 OF 2