NOTES
■ DESIGNED IN ACCORDANCE WITH AASHTO HS20-44 TRAFFIC BRIDGE LOADING USING 4,000 PSI COMPRESSIVE STRENGTH CONCRETE AND 60,000 PSI YIELD STRENGTH ASTM A-706 STEEL REINFORCEMENT.
■ ALL PARTS TO BE STENCILED: MFG DATE / JOB NUMBER / PRODUCT ID / WEIGHT.

BILL OF MATERIALS

ITEM	UNIT QTY	QTY	PART NUMBER	DESCRIPTION
1	8.192 ft^3	8.192 ft^3	100043269	CONCRETE 4000 PSI WETCAST SITE-112
2	1	1	200108094	REINFORCING MAT 200108094

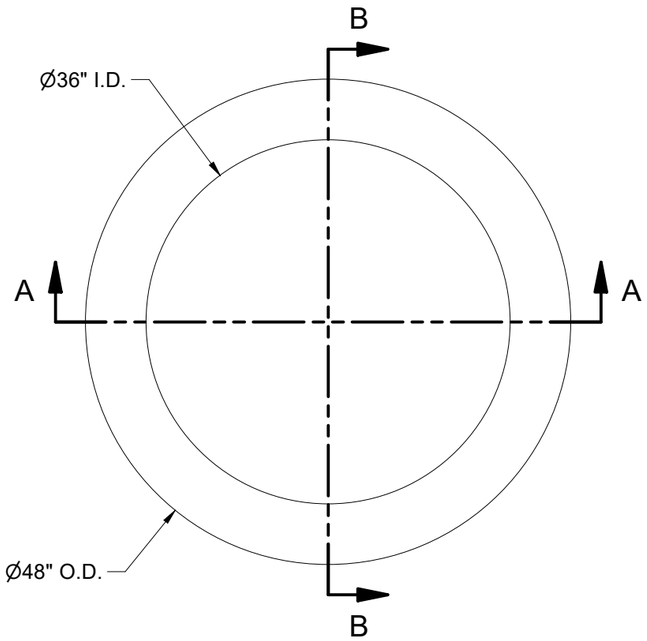

PLAN VIEW

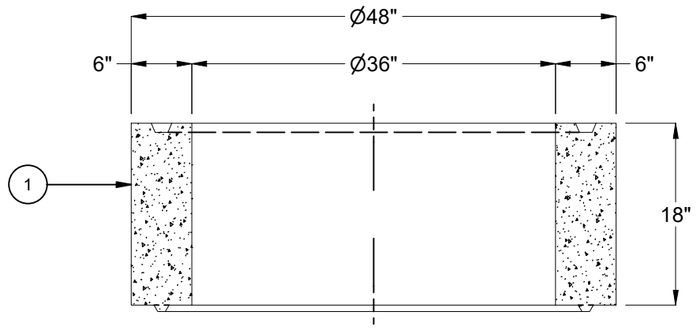

SECTION A-A

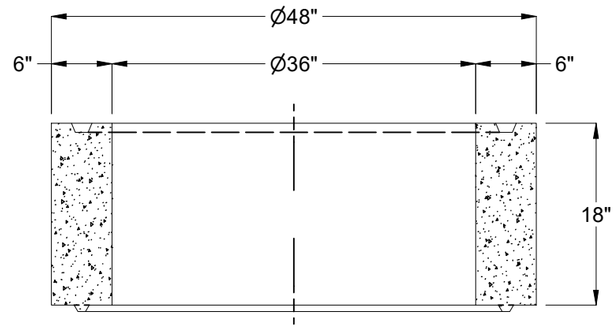

SECTION B-B

200080871.idw

REVISION HISTORY			
REV	DESCRIPTION	DATE	APPROVED
A-1-1	UPDATED CASTING DRAWINGS	2/26/2026	

BURY DEPTH:	0.0' - 20.0' to Top		
WATER LEVEL:	Below Structure	APPROX. WEIGHT:	1231.09 Lbs
DESIGN SPEC:	ACI 318,ASTM C478	LOADING SPEC:	A-16 (AASHTO HS20-44)
REINFORCEMENT TYPE:	Deformed Wire	LIFTING TYPE:	None

Infrastructure
JENSEN
WWW.JENSENPRECAST.COM

©2026 Jensen Infrastructure - All rights reserved.
All materials appearing as Jensen Infrastructure documents and the like are proprietary work product and are protected under U.S. copyright and other laws.
Unless in conjunction with business conducted with Jensen Infrastructure , any use of Jensen Infrastructure work product without express, written consent is prohibited, and recipient is prohibited from distributing any and all work product to non-approved third parties under penalty of civil action. This product shall only be produced in a Jensen Infrastructure facility.

DESCRIPTION:	Manhole D3648x18 Barrel SW Joint CASTING DRAWING		REV: A-1-1
PART NUMBER:	200080871	DRAWN BY:	M. Zaragoza
CREATED:	10/11/2023	MODIFIED:	2/26/2026
			SHEET: 1 OF 1