DESIGN NOTES
■ FOR COMPLETE DESIGN AND PRODUCT INFORMATION CONTACT JENSEN PRECAST.

BILL OF MATERIALS

ITEM	UNIT QTY	QTY	PART NUMBER	DESCRIPTION
1	1	1	200075985	Tank JOP 4000 Gallon 4-6 Inch Oval Bottom Section Double Baffle Recess
2	1	1	200075972	Vertical Slab Baffle JOP 4000 6 Inch
3	1	2	100002698	PIPE FITTING PVC SDR35 SAN TEE 6DIA
4	1	1	100002710	FITTING PVC SDR35 6IN DIA 90 DEG ELBOW ASTM D-3034 SOLVENT WELD SEWER DRAIN
5	*Varies*	63.000 in	100002511	PIPE PVC 6IN DIA SDR35 ASTM D-3034 SOLVENT WELD SEWER DRAIN

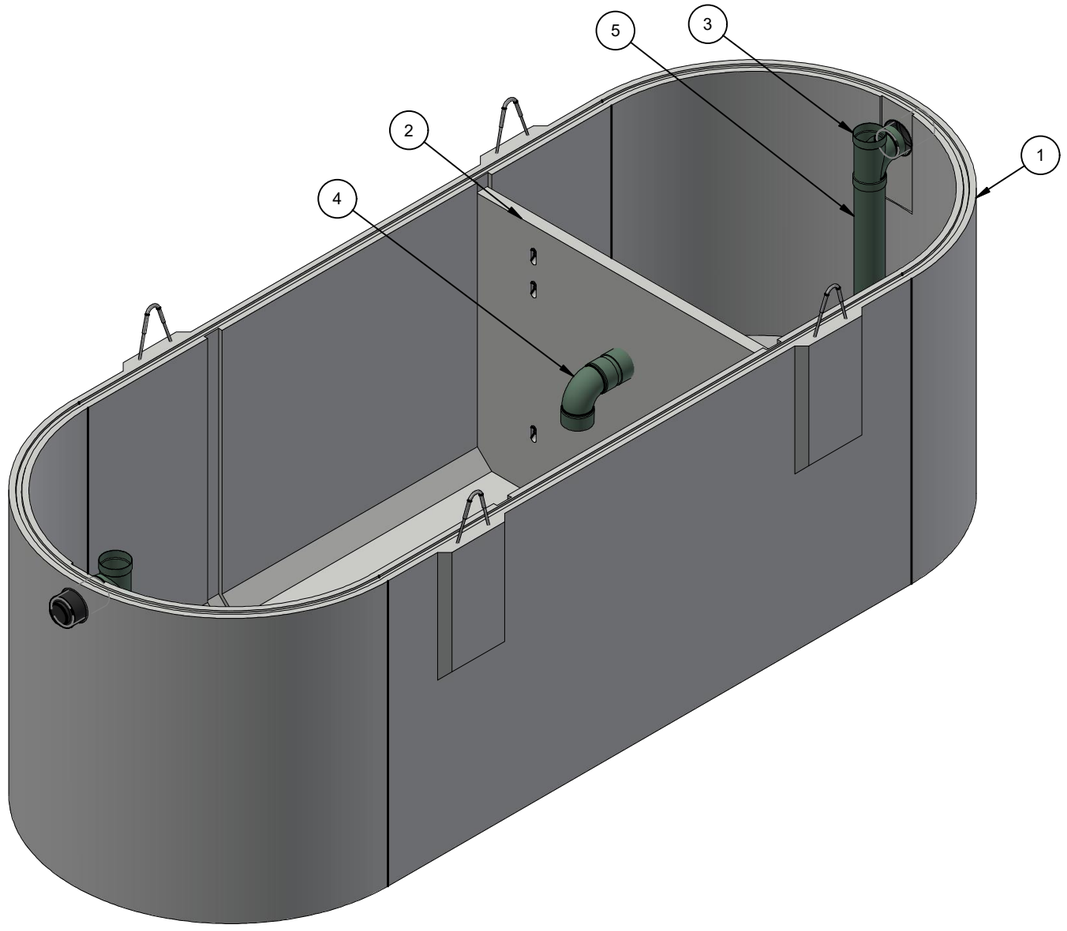

ISO VIEW

MODEL: JOP-4000-EBE-SO

LIFTING NOTES
■ THIS CONCRETE PRODUCT IS DESIGNED TO BE LIFTED AT 2500 PSI WITH 4 LIFT CONNECTIONS EQUALLY LOADED TO 4 LIFTING POINTS AT A MINIMUM 90° SLING ANGLE, MEASURED FROM HORIZONTAL.

BURY DEPTH:	1.7' - 5.6' to Top		
WATER LEVEL:	Below Structure	APPROX. WEIGHT:	25022.92 Lbs
DESIGN SPEC:	ACI 318,ASTM C890	LOADING SPEC:	A-16 (AASHTO HS20-44)
AGENCY:		AGENCY SPEC:	

JENSEN PRECAST EST. 1968

WWW.JENSENPRECAST.COM

©2024 Jensen Precast- All rights reserved.
All materials appearing as Jensen Precast documents and the like are proprietary work product and are protected under U.S. copyright and other laws.
Unless in conjunction with business conducted with Jensen Precast, any use of Jensen Precast work product without express, written consent is prohibited, and recipient is prohibited from distributing any and all work product to non-approved third parties under penalty of civil action.

CHANGE HISTORY			
NO.	DESCRIPTION	DATE	BY
1	2311-56180	11/30/23	MGL

DESCRIPTION: Tank JOP 4000 Gallon 6 Inch Assembly Sand-Oil Interceptors Single Baffle LAYOUT REVIEW			REV: A-3
PART NUMBER:	200080561	DRAWN BY: M. Lincoln	SHEET: 1 OF 2
CREATED:	10/6/2023	MODIFIED:	1/3/2024

200080561.idw

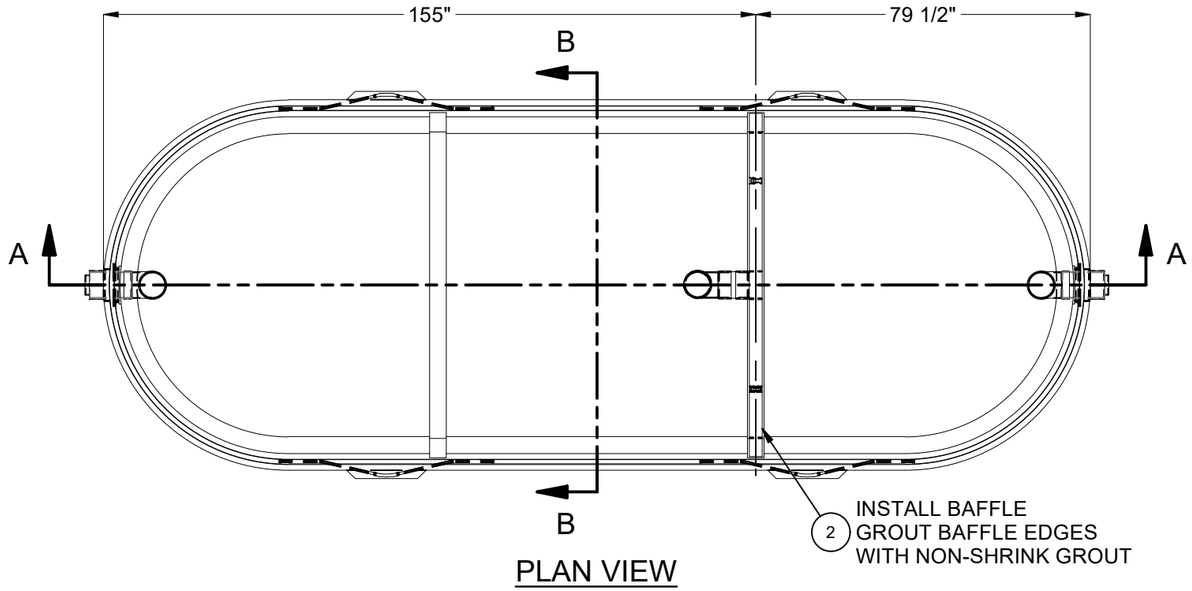

PLAN VIEW

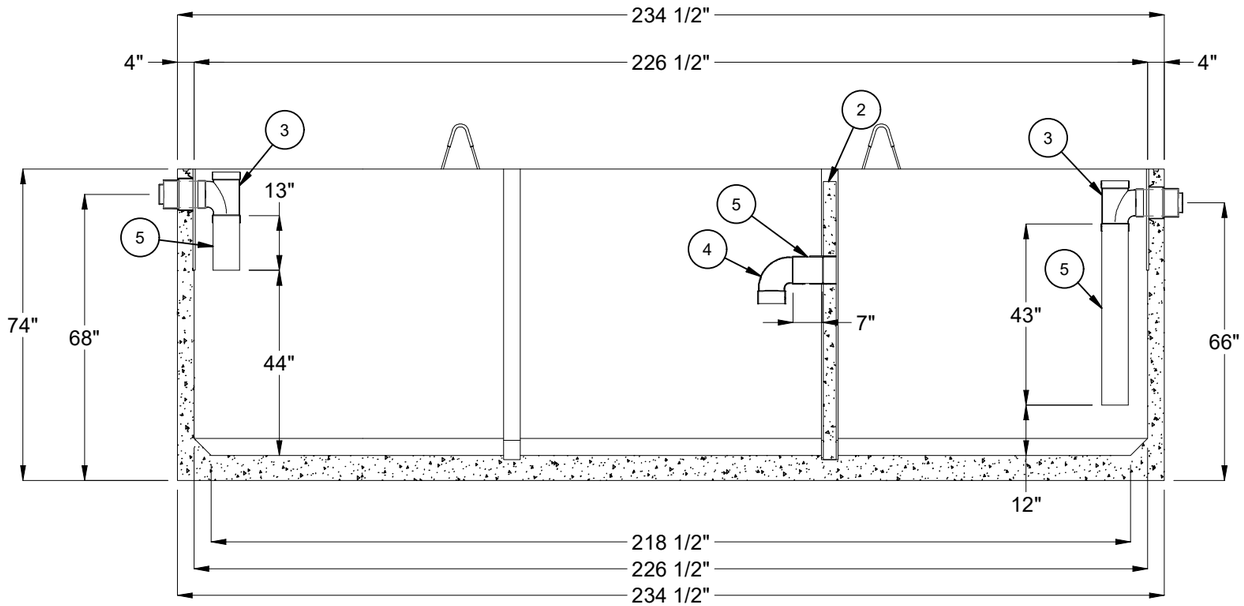

SECTION A-A

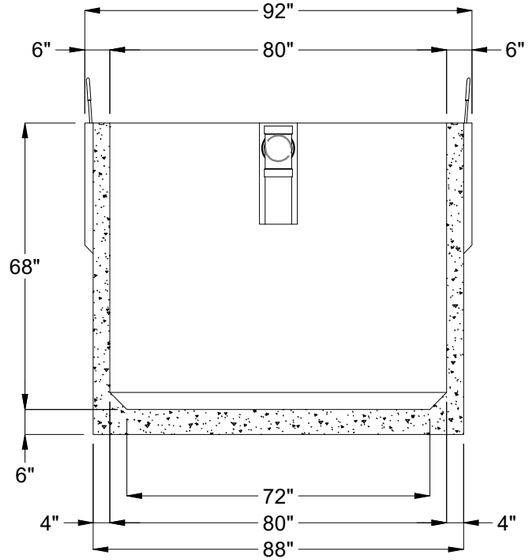

SECTION B-B

BURY DEPTH:	1.7' - 5.6' to Top		
WATER LEVEL:	Below Structure	APPROX. WEIGHT:	25022.92 Lbs
DESIGN SPEC:	ACI 318,ASTM C890	LOADING SPEC:	A-16 (AASHTO HS20-44)
AGENCY:		AGENCY SPEC:	

JENSEN PRECAST EST. 1968

WWW.JENSENPRECAST.COM

©2024 Jensen Precast- All rights reserved.
All materials appearing as Jensen Precast documents and the like are proprietary work product and are protected under U.S. copyright and other laws.
Unless in conjunction with business conducted with Jensen Precast, any use of Jensen Precast work product without express, written consent is prohibited, and recipient is prohibited from distributing any and all work product to non-approved third parties under penalty of civil action.

DESCRIPTION: Tank JOP 4000 Gallon 6 Inch Assembly Sand-Oil Interceptors Single Baffle

LAYOUT DRAWING

PART NUMBER:	200080561	DRAWN BY:	M. Lincoln
CREATED:	10/6/2023	MODIFIED:	1/3/2024

REV: A-3

SHEET: 2 OF 2

200080561.idw