DESIGN NOTES
■ NOMINAL TANK GALLON CAPACITY IS APPROXIMATELY 4110 GALLONS. ACTUAL OPERATING GALLON CAPACITY IS APPROXIMATELY 3995 GALLONS WITH TWO 3" BAFFLE WALLS INSTALLED.
■ FOR COMPLETE DESIGN AND PRODUCT INFORMATION CONTACT JENSEN PRECAST.

BILL OF MATERIALS

ITEM	UNIT QTY	QTY	PART NUMBER	DESCRIPTION
3	1	1	200075985	Tank JOP 4000 Gallon 4-6 Inch Oval Bottom Section Double Baffle Recess
4	1	2	200075970	Vertical Slab Baffle JOP 4000 4 Inch
1	*Varies*	44.000 in	100002510	PIPE PVC 4IN DIA SDR35 ASTM D-3034 SOLVENT WELD SEWER DRAIN
2	1	1	100007003	FITTING PVC SDR35 4IN DIA 90 DEG ELBOW ASTM D-3034 SOLVENT WELD SEWER DRAIN

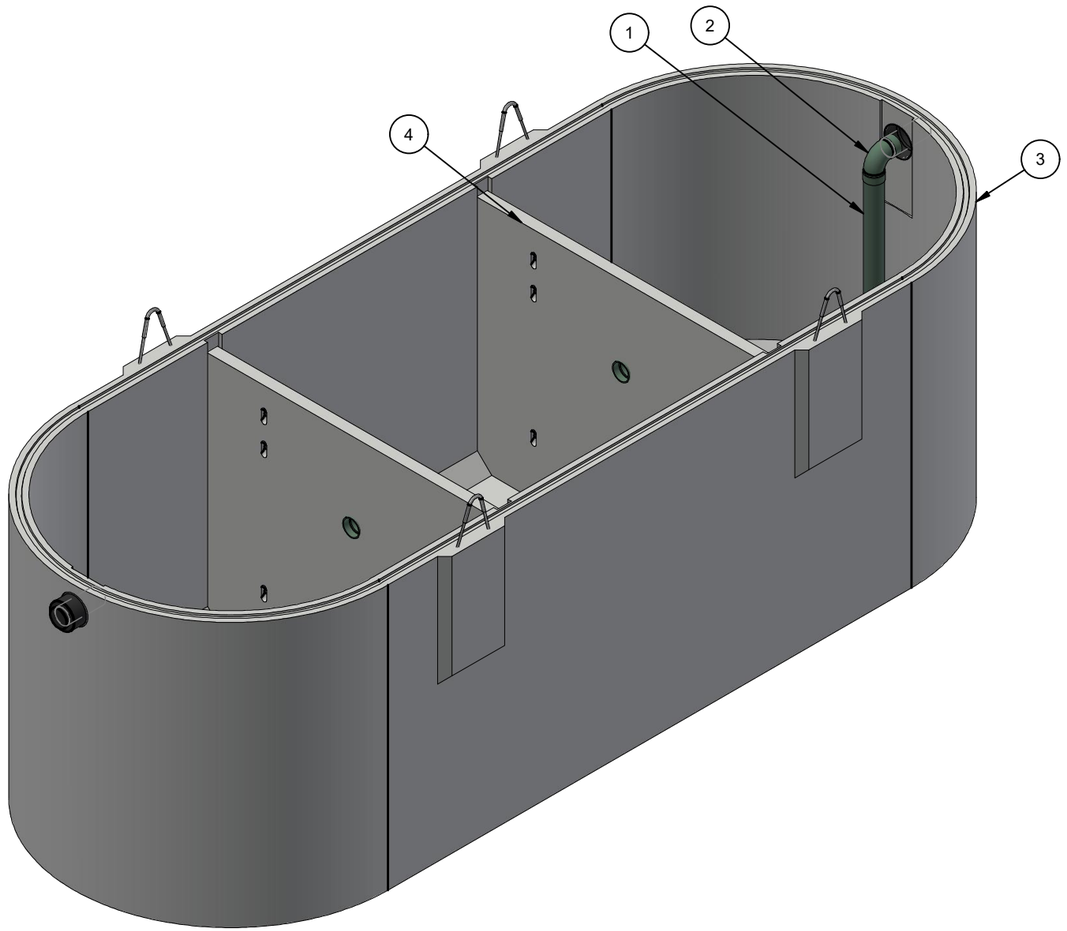

ISO VIEW

MODEL: JOP-4000-CL

LIFTING NOTES
■ THIS CONCRETE PRODUCT IS DESIGNED TO BE LIFTED AT 2500 PSI WITH 4 LIFT CONNECTIONS EQUALLY LOADED TO 4 LIFTING POINTS AT A MINIMUM 90° SLING ANGLE, MEASURED FROM HORIZONTAL.

BURY DEPTH:	1.7' - 5.6' to Top		
WATER LEVEL:	Below Structure	APPROX. WEIGHT:	26423.82 Lbs
DESIGN SPEC:	ACI 318,ASTM C890	LOADING SPEC:	A-16 (AASHTO HS20-44)
AGENCY:		AGENCY SPEC:	

JENSEN PRECAST EST. 1968

WWW.JENSENPRECAST.COM

©2024 Jensen Precast- All rights reserved.
All materials appearing as Jensen Precast documents and the like are proprietary work product and are protected under U.S. copyright and other laws.
Unless in conjunction with business conducted with Jensen Precast, any use of Jensen Precast work product without express, written consent is prohibited, and recipient is prohibited from distributing any and all work product to non-approved third parties under penalty of civil action.

CHANGE HISTORY			
NO.	DESCRIPTION	DATE	BY
1	2311-56180	11/30/23	MGL

DESCRIPTION:	Tank JOP 4000 Gallon 4 Inch Assembly Clarifier Double Baffle LAYOUT REVIEW		REV: A-3
PART NUMBER:	200080557	DRAWN BY: M. Lincoln	SHEET: 1 OF 2
CREATED:	10/6/2023	MODIFIED: 1/3/2024	

200080557.idw

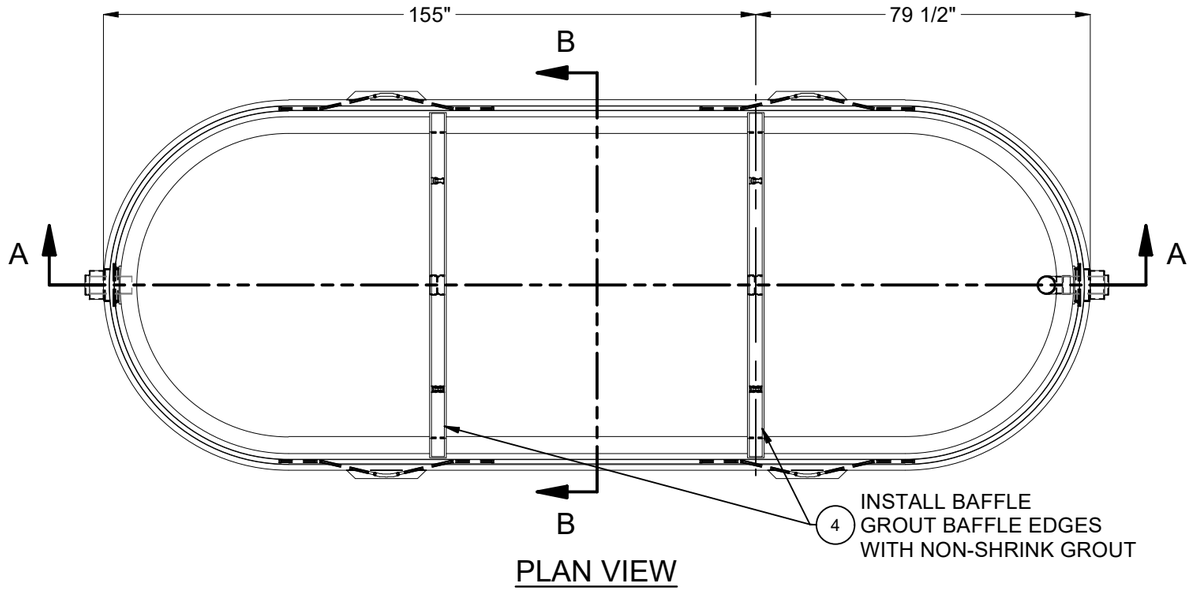

PLAN VIEW

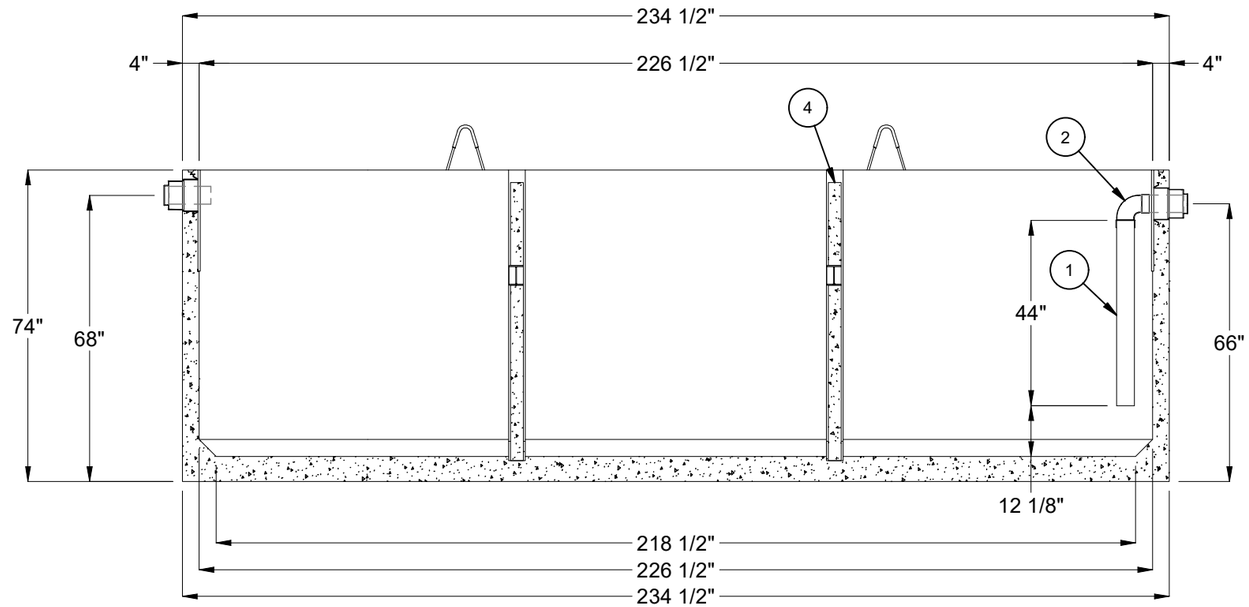

SECTION A-A

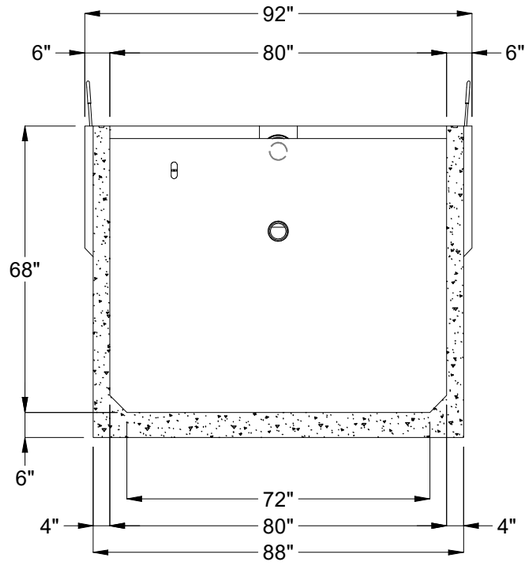

SECTION B-B

BURY DEPTH:	1.7' - 5.6' to Top		
WATER LEVEL:	Below Structure	APPROX. WEIGHT:	26423.82 Lbs
DESIGN SPEC:	ACI 318,ASTM C890	LOADING SPEC:	A-16 (AASHTO HS20-44)
AGENCY:		AGENCY SPEC:	

JENSEN PRECAST EST. 1968

WWW.JENSENPRECAST.COM

©2024 Jensen Precast- All rights reserved.
All materials appearing as Jensen Precast documents and the like are proprietary work product and are protected under U.S. copyright and other laws.
Unless in conjunction with business conducted with Jensen Precast, any use of Jensen Precast work product without express, written consent is prohibited, and recipient is prohibited from distributing any and all work product to non-approved third parties under penalty of civil action.

DESCRIPTION:	Tank JOP 4000 Gallon 4 Inch Assembly Clarifier Double Baffle LAYOUT DRAWING		REV: A-3
PART NUMBER:	200080557	DRAWN BY:	M. Lincoln
CREATED:	10/6/2023	MODIFIED:	1/3/2024
			SHEET: 2 OF 2

200080557.idw