| NOTES |
|---|
| ■ IN COMPLIANCE WITH UNIFORM PLUMBING CODE (UPC), INTERNATIONAL PLUMBING CODE (IPC), AND STRUCTURAL LOADING REQUIREMENTS OF ASTM INTERNATIONAL C1227. |
| ■ MINIMUM ONE (1) ACCESS OPENING PER COMPARTMENT REQUIRED (AS SHOWN). ADDITIONAL ACCESS CAN BE ADDED IN LIEU OF PLUG COVER WHEN REQUIRED BY THE AUTHORITY HAVING JURISDICITON. |
| ■ MUST BE INSTALLED PER "JENSEN PRECAST UNDERGROUND WASTEWATER PRECAST CONCRETE TANK INSTALLATION PROCEDURE" WHICH CAN BE FOUND AT https://www.jensenprecast.com/Tank-Installation-Procedure-d2106.pdf. THIS PROCEDURE ADDRESSES REQUIRED EXCAVATION, SITE PREPARATION, INSTALLATION, VENTILATION, AND WATER/VACCUM TESTING |

## BILL OF MATERIALS

| ITEM | UNIT QTY | QTY | PART NUMBER | DESCRIPTION | MASS (lb) |
|---|---|---|---|---|---|
| 1 | 1 | 1 | 200079484 | Tank JOP 1500 Gallon 4/6 Inch Assembly 24"E, 24"B, 24"E Single Baffle | 18891 |
| 2 | 1 | 1 | 200080360 | 200080369 Plumbing - JOP 1500 Gallon 6 Inch Layout Septic 24"E, 24"B, 24"E Single Baffle | 10 |
| 3 | 1 | JOB SPECIFIC | 100005850 | CI RINGCOVER 24DIA B-5105-02/B-5105-R2 ASTM A48 CL35B CP O-RING GASKET OSI JENSEN/INTERCEPT | 196 |
| 4 | 1 | JOB SPECIFIC | 100001524 | Grade Ring D2432x3 | 89 |
| 5 | 1 | JOB SPECIFIC | 100001525 | Grade Ring D2432x6 | 180 |
| 6 | 1 | JOB SPECIFIC | 100001526 | Grade Ring D2432x12 | 365 |
| 7 | 1 | JOB SPECIFIC | 100012046 | Plug Cover D2428x6 Slab Top | 300 |

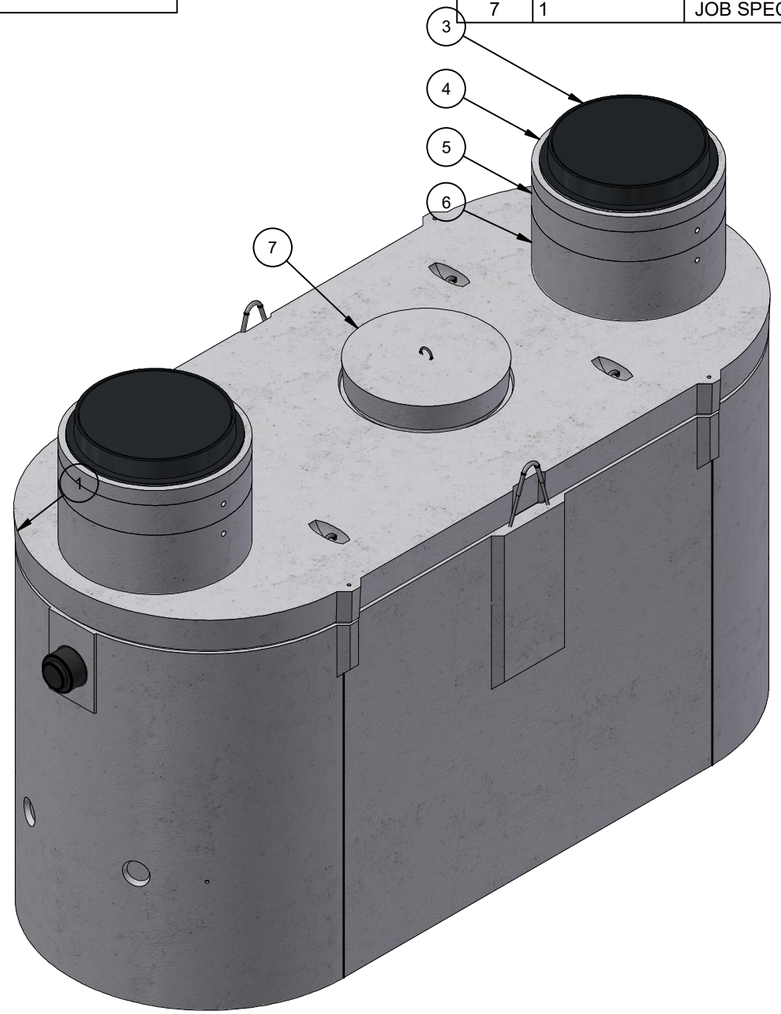


ISOMETRIC VIEW

# MODEL: JOP-1500-EBE-ST

| CHANGE HISTORY | | | |
|---|---|---|---|
| REV | DESCRIPTION | DATE | BY |
| 1 | DRAWING CREATED | 9/25/2023 | DCH |
| 2 | BOOT SWAPPED TO 4/6 INCH | 11/26/2024 | MGL |

| | | | |
|---|---|---|---|
| BURY DEPTH: | 1.1' - 6.0' to Top | | |
| WATER LEVEL: | Below Structure | APPROX. WEIGHT: | 20726.73 Lbs |
| DESIGN SPEC: | ACI 318,ASTM C890 | LOADING SPEC: | A-16 (AASHTO HS20-44) |
| AGENCY: | | AGENCY SPEC: | |

JENSEN PRECAST EST. 1968

WWW.JENSENPRECAST.COM

©2024 Jensen Precast- All rights reserved.
All materials appearing as Jensen Precast documents and the like are proprietary work product and are protected under U.S. copyright and other laws.
Unless in conjunction with business conducted with Jensen Precast, any use of Jensen Precast work product without express, written consent is prohibited, and recipient is prohibited from distributing any and all work product to non-approved third parties under penalty of civil action.

DESCRIPTION: Tank JOP 1500 Gallon 6 Inch Layout Septic 24"E, 24"B, 24"E Single Baffle

CASTING LAYOUT

REV: C-2

| | | | |
|---|---|---|---|
| PART NUMBER: | 200080369 | DRAWN BY: | M. Lincoln |
| CREATED: | 9/14/2023 | MODIFIED: | 11/26/2024 |

SHEET: 1 OF 2

200080369.idw

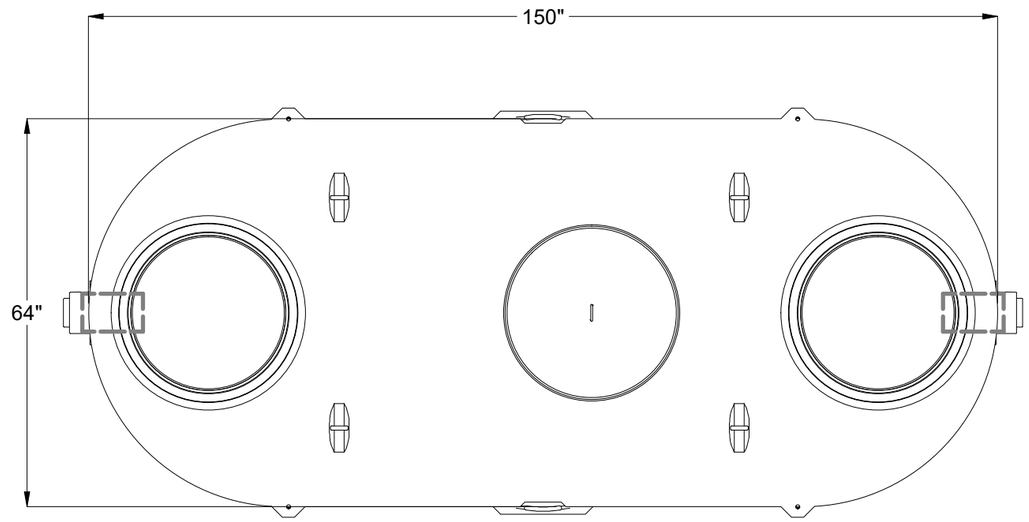


PLAN VIEW

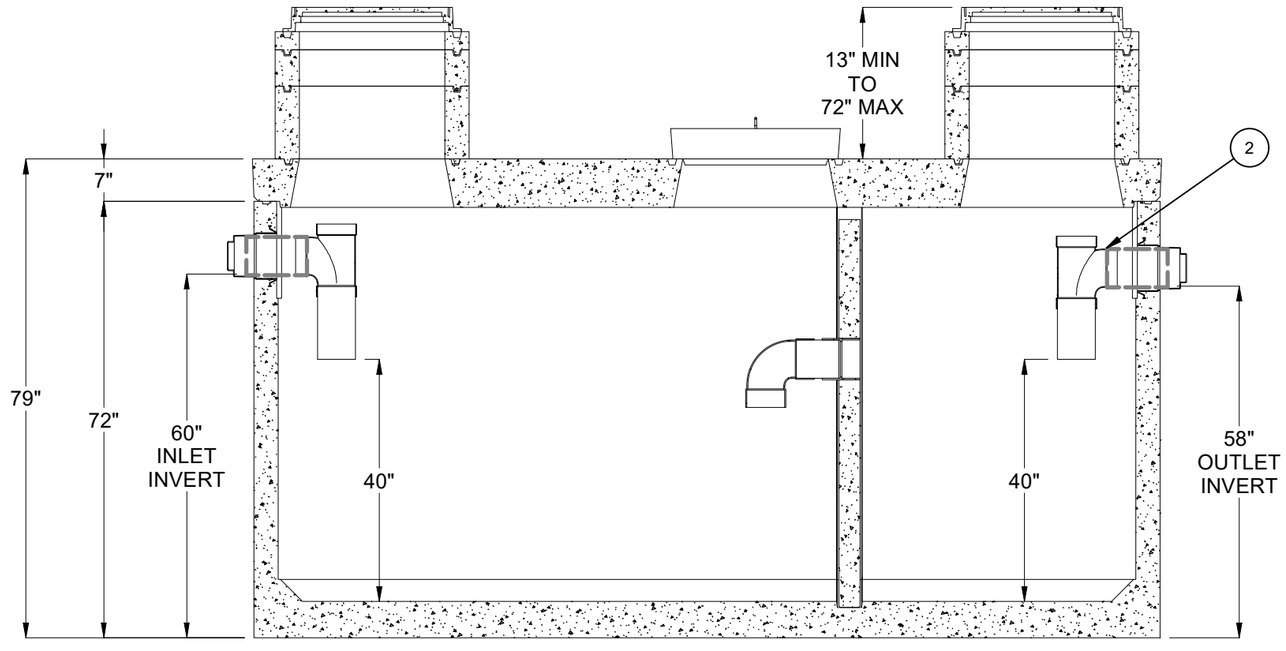


CROSS SECTION

| | | | |
|---|---|---|---|
| BURY DEPTH: | 1.1' - 6.0' to Top | | |
| WATER LEVEL: | Below Structure | APPROX. WEIGHT: | 20726.73 Lbs |
| DESIGN SPEC: | ACI 318,ASTM C890 | LOADING SPEC: | A-16 (AASHTO HS20-44) |
| AGENCY: | | AGENCY SPEC: | |

JENSEN PRECAST EST. 1968

WWW.JENSENPRECAST.COM

©2024 Jensen Precast- All rights reserved.
All materials appearing as Jensen Precast documents and the like are proprietary work product and are protected under U.S. copyright and other laws.
Unless in conjunction with business conducted with Jensen Precast, any use of Jensen Precast work product without express, written consent is prohibited, and recipient is prohibited from distributing any and all work product to non-approved third parties under penalty of civil action.

DESCRIPTION: Tank JOP 1500 Gallon 6 Inch Layout Septic 24"E, 24"B, 24"E Single Baffle

CASTING DRAWING

| | | | |
|---|---|---|---|
| PART NUMBER: | 200080369 | DRAWN BY: | M. Lincoln |
| CREATED: | 9/14/2023 | MODIFIED: | 11/26/2024 |

REV: C-2

SHEET: 2 OF 2

200080369.idw