NOTES
■ IN COMPLIANCE WITH UNIFORM PLUMBING CODE (UPC), INTERNATIONAL PLUMBING CODE (IPC), AND STRUCTURAL LOADING REQUIREMENTS OF ASTM INTERNATIONAL.
■ MINIMUM ONE (1) ACCESS OPENING PER COMPARTMENT REQUIRED (AS SHOWN). ADDITIONAL ACCESS CAN BE ADDED IN LIEU OF PLUG COVER WHEN REQUIRED BY THE AUTHORITY HAVING JURISDICITON.
■ MUST BE INSTALLED PER "JENSEN PRECAST UNDERGROUND WASTEWATER PRECAST CONCRETE TANK INSTALLATION PROCEDURE" WHICH CAN BE FOUND AT https://www.jensenprecast.com/Tank-Installation-Procedure-d2106.pdf. THIS PROCEDURE ADDRESSES REQUIRED EXCAVATION, SITE PREPARATION, INSTALLATION, VENTILATION, AND WATER/VACCUM TESTING

BILL OF MATERIALS

ITEM	UNIT QTY	QTY	PART NUMBER	DESCRIPTION	MASS (lb)
1	1	1	200079484	Tank JOP 1500 Gallon 4/6 Inch Assembly 24"E, 24"B, 24"E Single Baffle	18891
2	1	1	200080359	200080368 Plumbing - JOP 1500 Gallon 6 Inch Layout Sand-Oil Interceptors 24"E, 24"B, 24"E Single Baffle	9
3	1	JOB SPECIFIC	100005850	CI RINGCOVER 24DIA B-5105-02/B-5105-R2 ASTM A48 CL35B CP O-RING GASKET OSI JENSEN/INTERCEPT	196
4	1	JOB SPECIFIC	100001524	Grade Ring D2432x3	89
5	1	JOB SPECIFIC	100001525	Grade Ring D2432x6	180
6	1	JOB SPECIFIC	100001526	Grade Ring D2432x12	365
7	1	JOB SPECIFIC	100012046	Plug Cover D2428x6 Slab Top	300

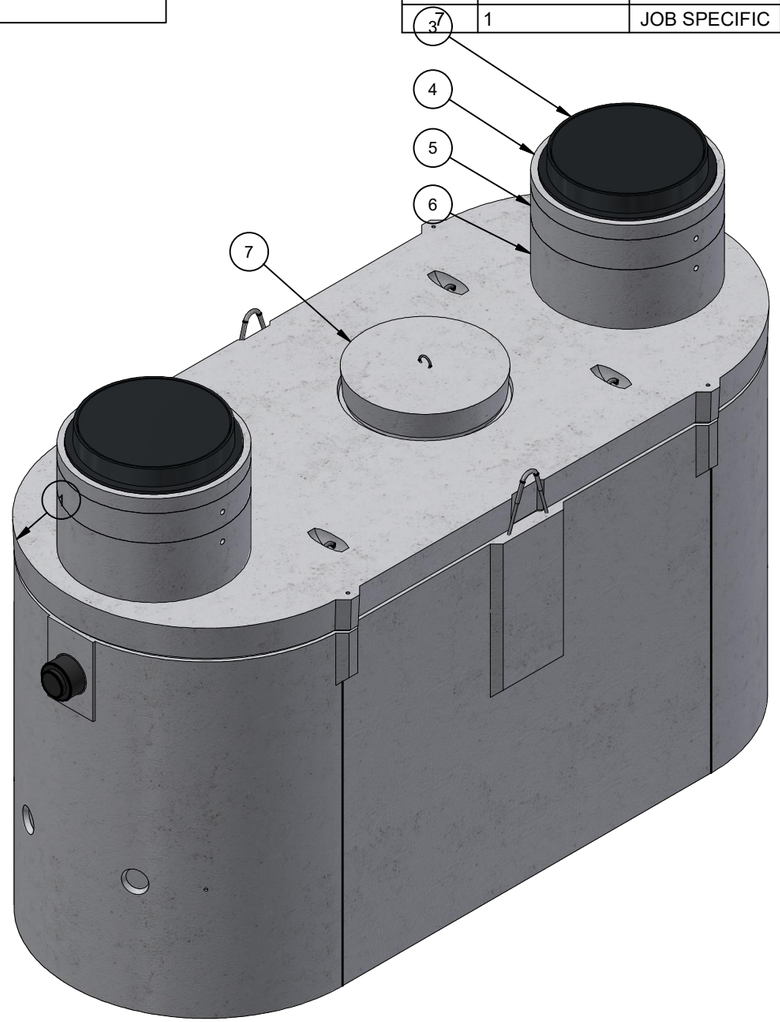

ISOMETRIC VIEW

MODEL: JOP-1500-EBE-SO

CHANGE HISTORY			
REV	DESCRIPTION	DATE	BY
1	DRAWING CREATED	9/25/2023	DCH
2	BOOT SWAPPED TO 4/6 INCH	11/26/2024	MGL

BURY DEPTH:	1.1' - 6.0' to Top		
WATER LEVEL:	Below Structure	APPROX. WEIGHT:	20726.73 Lbs
DESIGN SPEC:	ACI 318,ASTM C890	LOADING SPEC:	A-16 (AASHTO HS20-44)
AGENCY:		AGENCY SPEC:	

JENSEN PRECAST EST. 1968

WWW.JENSENPRECAST.COM

©2024 Jensen Precast- All rights reserved.
All materials appearing as Jensen Precast documents and the like are proprietary work product and are protected under U.S. copyright and other laws.
Unless in conjunction with business conducted with Jensen Precast, any use of Jensen Precast work product without express, written consent is prohibited, and recipient is prohibited from distributing any and all work product to non-approved third parties under penalty of civil action.

DESCRIPTION: Tank JOP 1500 Gallon 6 Inch Layout Sand-Oil Interceptors 24"E, 24"B, 24"E Single Baffle

CASTING LAYOUT

PART NUMBER:	200080368	DRAWN BY:	M. Lincoln
CREATED:	9/14/2023	MODIFIED:	11/26/2024

REV: C-2

SHEET: 1 OF 2

200080368.idw

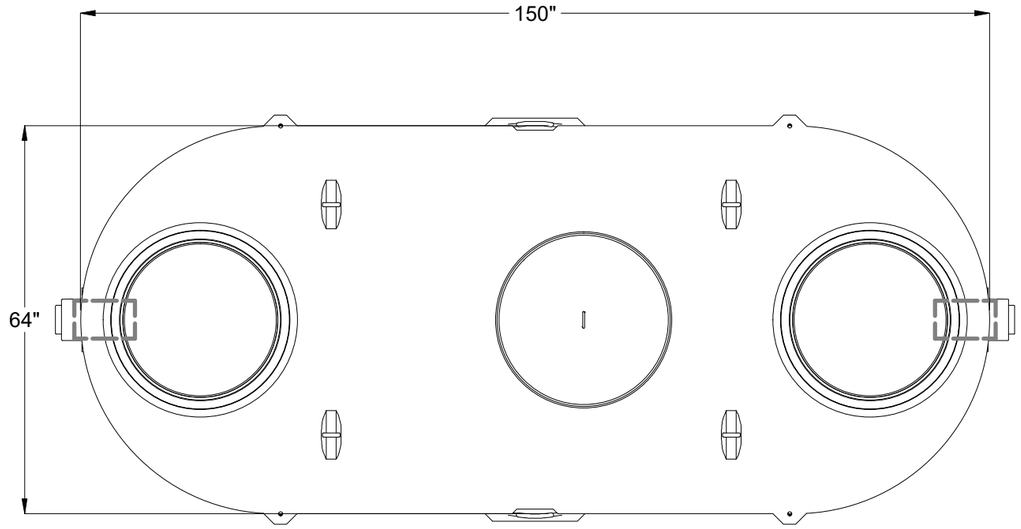

PLAN VIEW

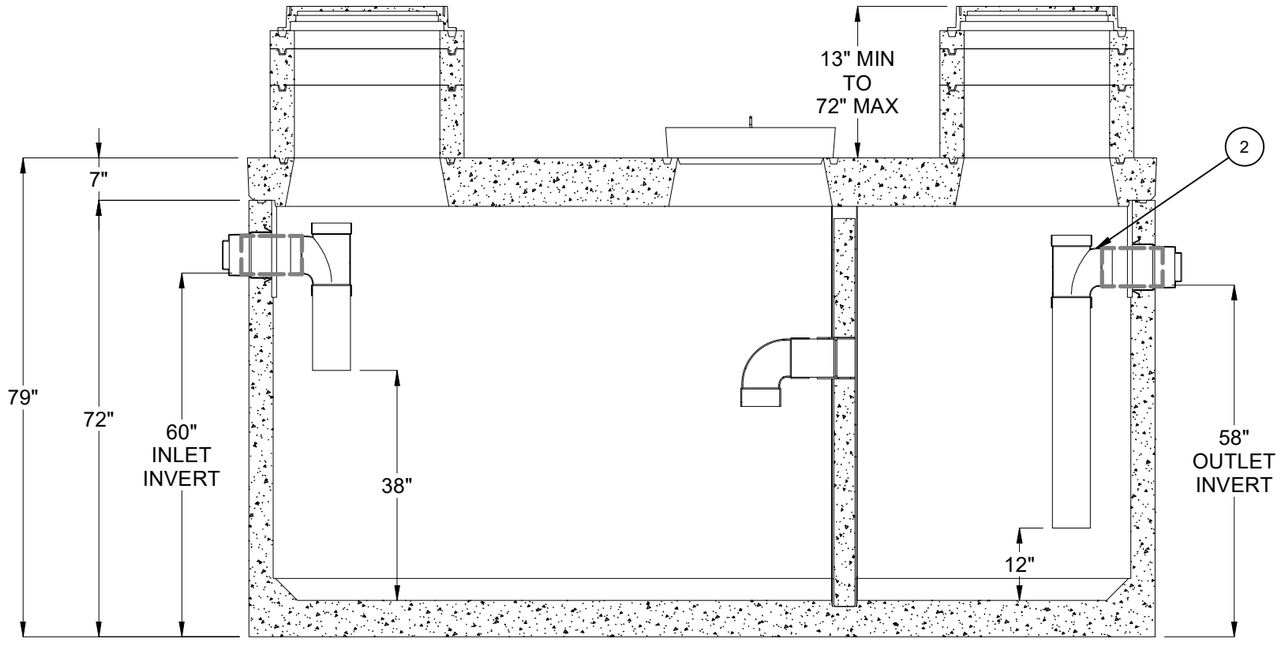

CROSS SECTION

BURY DEPTH:	1.1' - 6.0' to Top		
WATER LEVEL:	Below Structure	APPROX. WEIGHT:	20726.73 Lbs
DESIGN SPEC:	ACI 318,ASTM C890	LOADING SPEC:	A-16 (AASHTO HS20-44)
AGENCY:		AGENCY SPEC:	

JENSEN PRECAST EST. 1968

WWW.JENSENPRECAST.COM

©2024 Jensen Precast- All rights reserved.
All materials appearing as Jensen Precast documents and the like are proprietary work product and are protected under U.S. copyright and other laws.
Unless in conjunction with business conducted with Jensen Precast, any use of Jensen Precast work product without express, written consent is prohibited, and recipient is prohibited from distributing any and all work product to non-approved third parties under penalty of civil action.

DESCRIPTION: Tank JOP 1500 Gallon 6 Inch Layout Sand-Oil Interceptors 24"E, 24"B, 24"E Single Baffle

CASTING DRAWING

PART NUMBER:	200080368	DRAWN BY:	M. Lincoln
CREATED:	9/14/2023	MODIFIED:	11/26/2024

REV: C-2

SHEET: 2 OF 2

200080368.idw