BILL OF MATERIALS

ITEM	QTY	PART NUMBER	DESCRIPTION
1	39.125 in	100002510	PIPE PVC 4IN DIA SDR35 ASTM D-3034 SOLVENT WELD SEWER DRAIN
2	1	100007003	FITTING PVC SDR35 4IN DIA 90 DEG ELBOW ASTM D-3034 SOLVENT WELD SEWER DRAIN

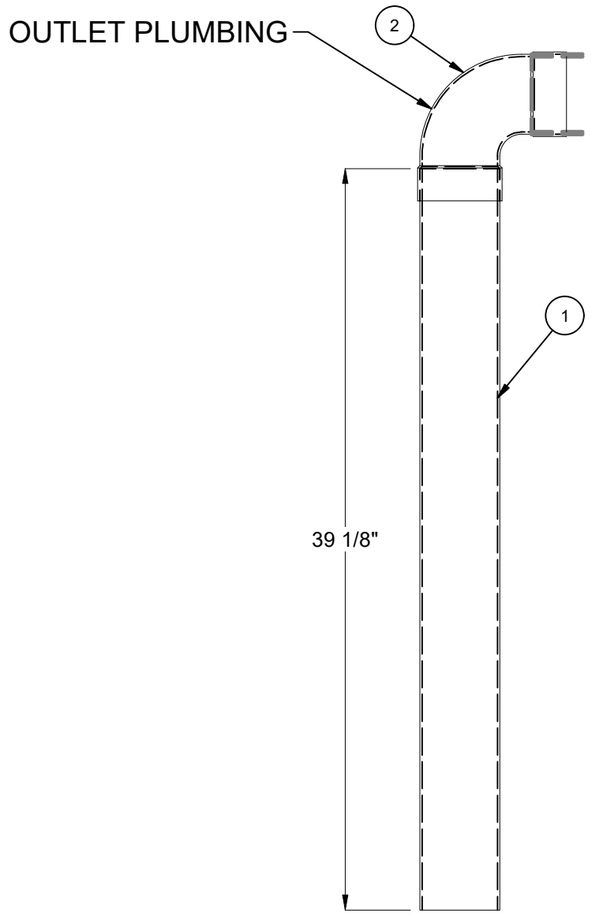

ELEVATION VIEW

200080357.idw

BURY DEPTH:	to		DESCRIPTION: 200080365 Plumbing - JOP 1500 Gallon 4 Inch Layout Clarifier 24"E, 24"C, 24"E Double Baffle CASTING LAYOUT		REV: A-1
WATER LEVEL:	APPROX. WEIGHT: 2 Lbs	JENSEN PRECAST EST. 1968 WWW.JENSENPRECAST.COM		PART NUMBER: 200080357	DRAWN BY: MLR	SHEET: 1 OF 1
DESIGN SPEC:	LOADING SPEC:			CREATED: 9/14/2023	MODIFIED: 12/6/2023
REINFORCEMENT TYPE:	LIFTING TYPE:				

©2023 Jensen Precast- All rights reserved.
All materials appearing as Jensen Precast documents and the like are proprietary work product and are protected under U.S. copyright and other laws.
Unless in conjunction with business conducted with Jensen Precast, any use of Jensen Precast work product without express, written consent is prohibited, and recipient is prohibited from distributing any and all work product to non-approved third parties under penalty of civil action.