BILL OF MATERIALS

ITEM	UNIT QTY	QTY	PART NUMBER	DESCRIPTION
1	*Varies*	112.750 in	100002510	PIPE PVC 4IN DIA SDR35 ASTM D-3034 SOLVENT WELD SEWER DRAIN
2	1	3	100002697	PIPE FITTING PVC SDR35 SAN TEE 4DIA

200080354.idw

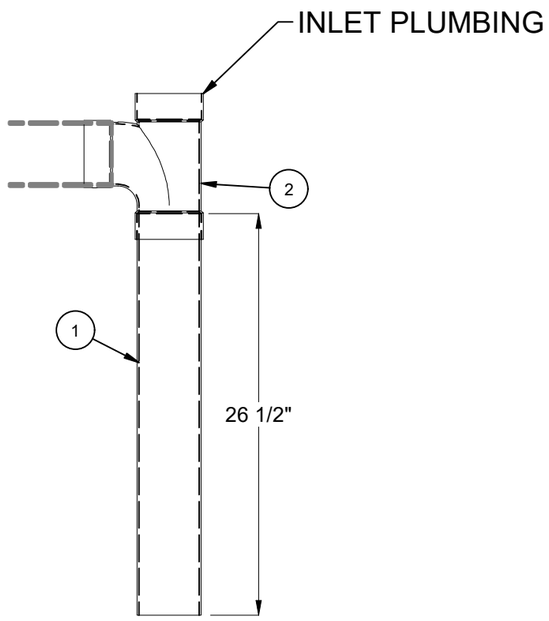

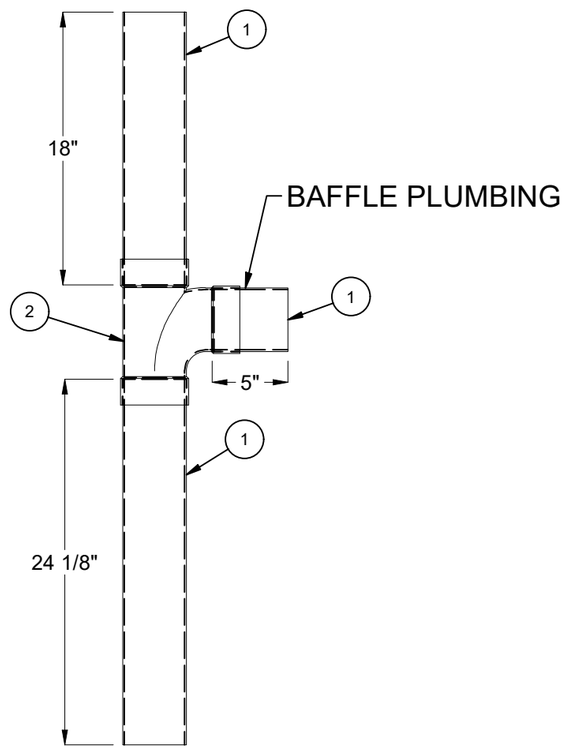

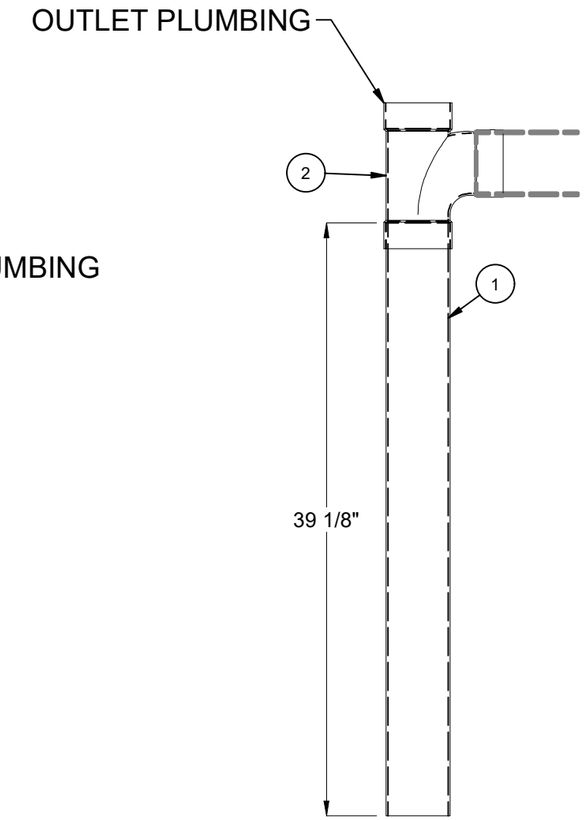

ELEVATION VIEW

BURY DEPTH:	to		
WATER LEVEL:	APPROX. WEIGHT:	8.08 Lbs	
DESIGN SPEC:	LOADING SPEC:		
REINFORCEMENT TYPE:	LIFTING TYPE:		

JENSEN PRECAST EST. 1968

WWW.JENSENPRECAST.COM

©2024 Jensen Precast- All rights reserved.
All materials appearing as Jensen Precast documents and the like are proprietary work product and are protected under U.S. copyright and other laws.
Unless in conjunction with business conducted with Jensen Precast, any use of Jensen Precast work product without express, written consent is prohibited, and recipient is prohibited from distributing any and all work product to non-approved third parties under penalty of civil action.

DESCRIPTION:
200080362 Plumbing - JOP 1500 Gallon 4 Inch Layout Gravity Grease Interceptor 24"E, 24"B, 24"E Single Baffle
CASTING LAYOUT

PART NUMBER:	200080354	DRAWN BY:	MLR
CREATED:	9/14/2023	MODIFIED:	2/14/2024

REV: A-1

SHEET: 1 OF 1