DESIGN NOTES
■ FOR COMPLETE DESIGN AND PRODUCT INFORMATION CONTACT JENSEN PRECAST.

BILL OF MATERIALS

ITEM	UNIT QTY	QTY	PART NUMBER	DESCRIPTION
1	1	1	200079955	Vault 120240x13 Slab Top 42"E, 48"x96"E, 42"E
2	1	1	200079954	Riser 120240x62 Knockout Racking
3	1	1	200079953	Riser 120240x46 Racking
4	1	1	200079952	Vault 120240x10 Slab Bottom Sump
5	1	1	200075609	Plug Cover 4896x7 Slab Top
6	1	2	100042305	CI RINGCOVER 42DIA TPU MID#67978 ASTM A-48 CL35B 6-VH 4.125-FLANGE DOWN - TACOMA POWER
7	JOB SPECIFIC	JOB SPECIFIC	100001561	Grade Ring D4254x6

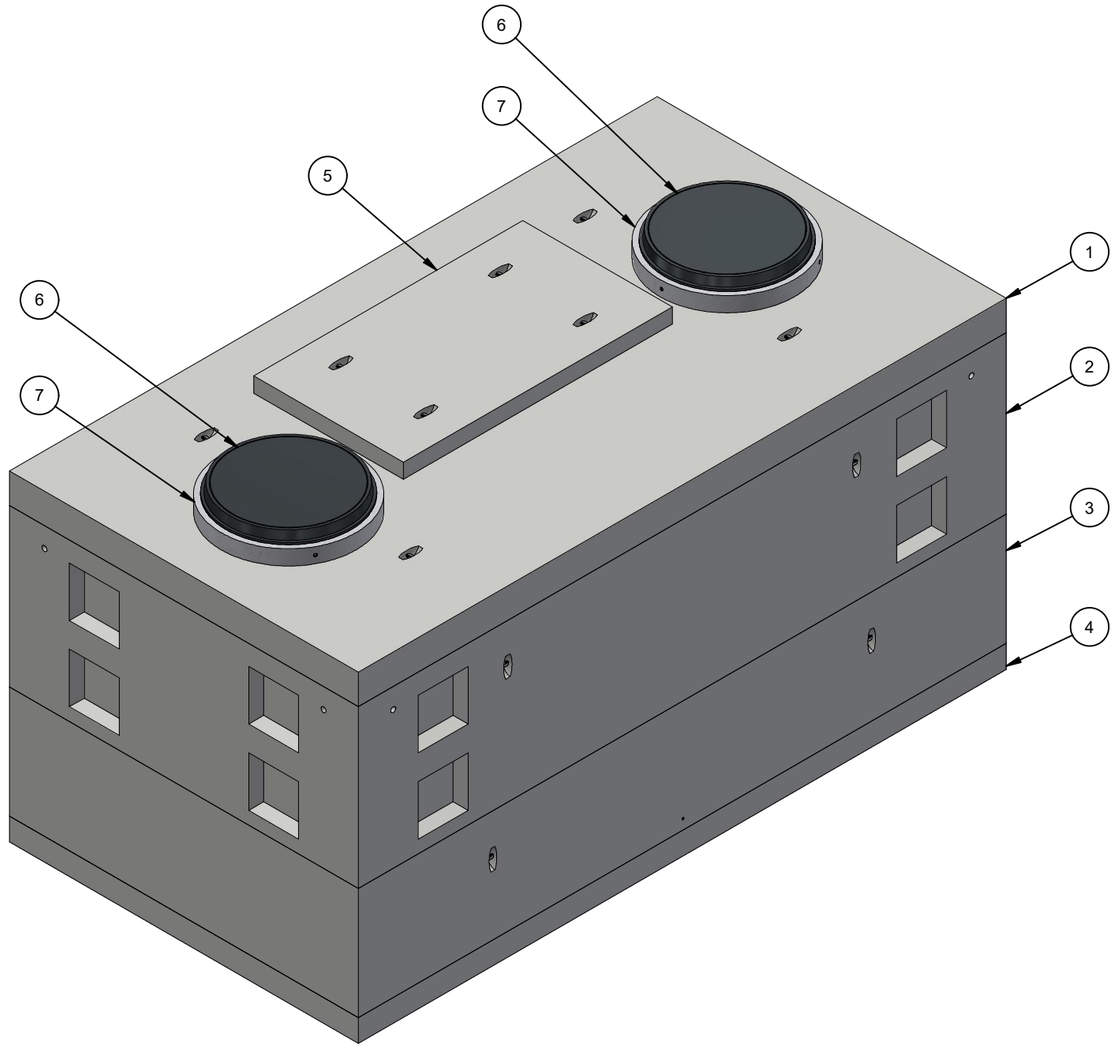

ISOMETRIC VIEW

CHANGE HISTORY			
NO.	DESCRIPTION	DATE	BY
A	DRAWING CREATED	4/14/2023	E.Fine

BURY DEPTH:	0.5' - 1.5' to Top		
WATER LEVEL:	3.0'	APPROX. WEIGHT:	136568.19 Lbs
DESIGN SPEC:	ACI 318,ASTM C857	LOADING SPEC:	A-16 (AASHTO HS20-44)
AGENCY:	Tacoma Power	AGENCY SPEC:	48257

JENSEN PRECAST EST. 1968

WWW.JENSENPRECAST.COM

©2024 Jensen Precast- All rights reserved.
All materials appearing as Jensen Precast documents and the like are proprietary work product and are protected under U.S. copyright and other laws.
Unless in conjunction with business conducted with Jensen Precast, any use of Jensen Precast work product without express, written consent is prohibited, and recipient is prohibited from distributing any and all work product to non-approved third parties under penalty of civil action.

DESCRIPTION:	Vault Layout 120240x108 Tacoma Power 48257 LAYOUT REVIEW		REV: A-2
PART NUMBER:	200079956	DRAWN BY:	E.Fine
CREATED:	9/13/2023	MODIFIED:	5/10/2024
			SHEET: 1 OF 3

200079956.idw

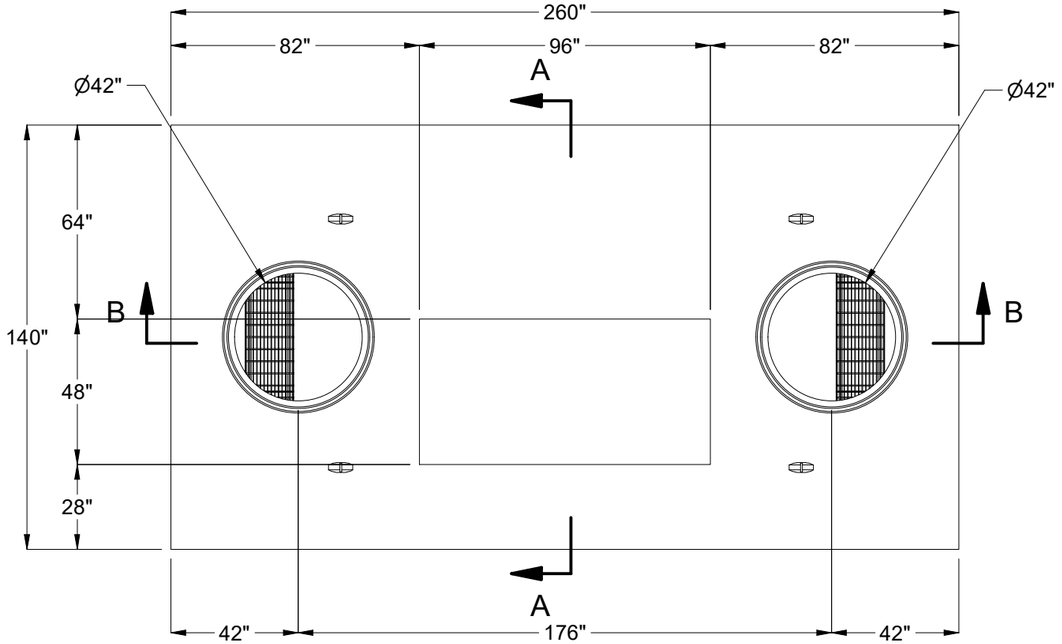

PLAN VIEW
(NOT SHOWING PLUG)

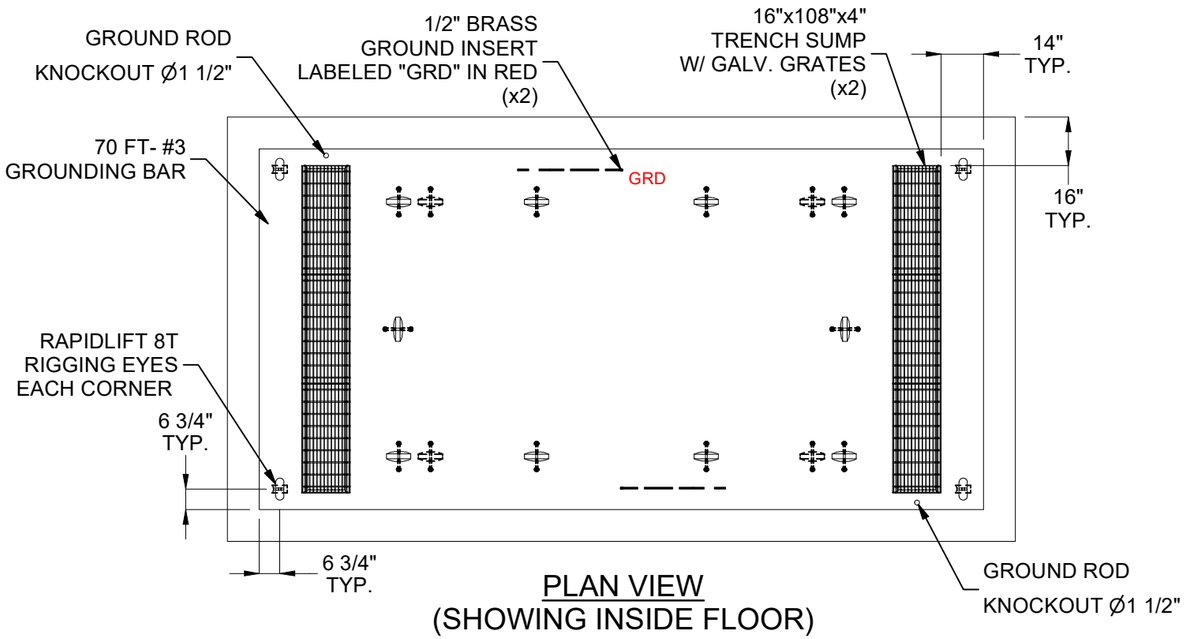

PLAN VIEW
(SHOWING INSIDE FLOOR)

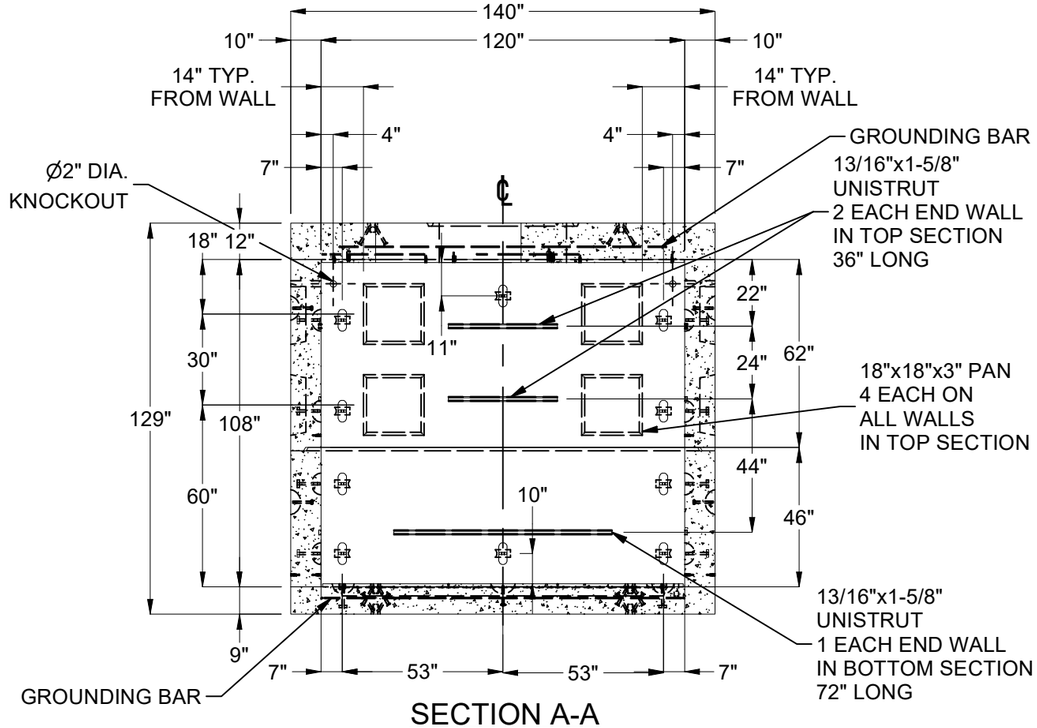

SECTION A-A

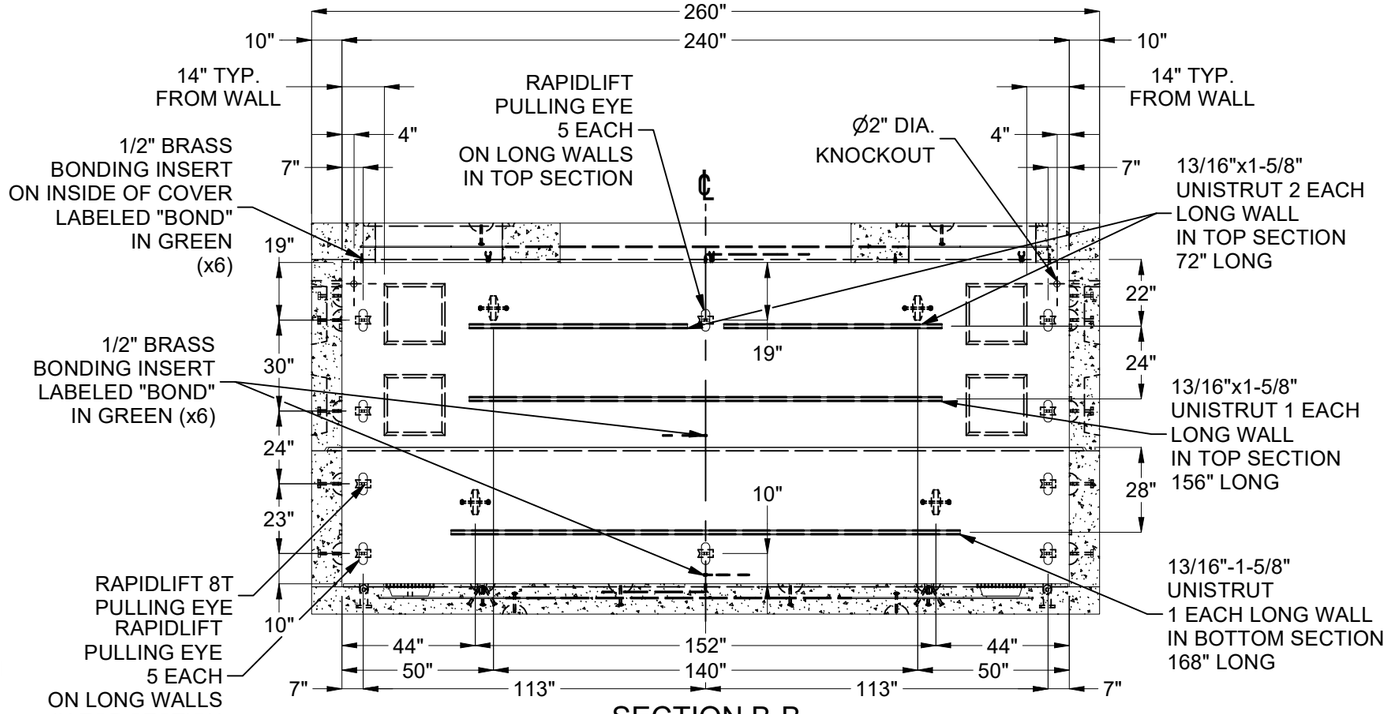

SECTION B-B

BURY DEPTH:	0.5' - 1.5' to Top		
WATER LEVEL:	3.0'	APPROX. WEIGHT:	136568.19 Lbs
DESIGN SPEC:	ACI 318,ASTM C857	LOADING SPEC:	A-16 (AASHTO HS20-44)
AGENCY:	Tacoma Power	AGENCY SPEC:	48257

JENSEN PRECAST EST. 1968

WWW.JENSENPRECAST.COM

©2024 Jensen Precast- All rights reserved.
All materials appearing as Jensen Precast documents and the like are proprietary work product and are protected under U.S. copyright and other laws.
Unless in conjunction with business conducted with Jensen Precast, any use of Jensen Precast work product without express, written consent is prohibited, and recipient is prohibited from distributing any and all work product to non-approved third parties under penalty of civil action.

DESCRIPTION:	Vault Layout 120240x108 Tacoma Power 48257 LAYOUT REVIEW		REV: A-2
PART NUMBER:	200079956	DRAWN BY:	E.Fine
CREATED:	9/13/2023	MODIFIED:	5/10/2024
			SHEET: 2 OF 3

200079956.idw

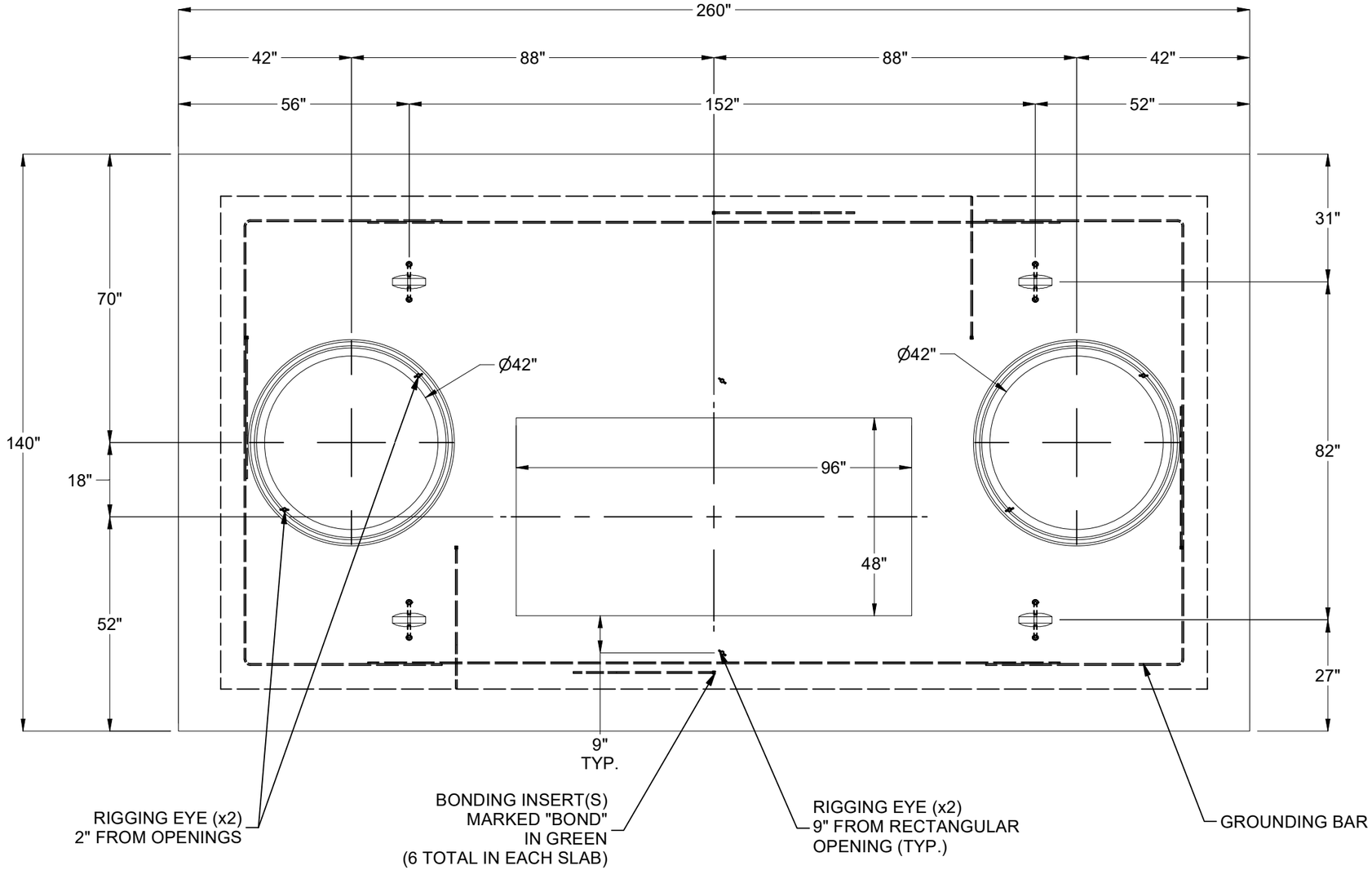

PLAN VIEW
(SHOWING TOP SLAB ONLY)

BURY DEPTH:	0.5' - 1.5' to Top		
WATER LEVEL:	3.0'	APPROX. WEIGHT:	136568.19 Lbs
DESIGN SPEC:	ACI 318,ASTM C857	LOADING SPEC:	A-16 (AASHTO HS20-44)
AGENCY:	Tacoma Power	AGENCY SPEC:	48257

JENSEN PRECAST EST. 1968
WWW.JENSENPRECAST.COM

©2024 Jensen Precast- All rights reserved.
All materials appearing as Jensen Precast documents and the like are proprietary work product and are protected under U.S. copyright and other laws.
Unless in conjunction with business conducted with Jensen Precast, any use of Jensen Precast work product without express, written consent is prohibited, and recipient is prohibited from distributing any and all work product to non-approved third parties under penalty of civil action.

DESCRIPTION:	Vault Layout 120240x108 Tacoma Power 48257 LAYOUT REVIEW		REV: A-2
PART NUMBER:	200079956	DRAWN BY:	E.Fine
CREATED:	9/13/2023	MODIFIED:	5/10/2024
			SHEET: 3 OF 3

200079956.idw