DESIGN NOTES
■ FOR COMPLETE DESIGN AND PRODUCT INFORMATION CONTACT JENSEN PRECAST.

BILL OF MATERIALS

ITEM	UNIT QTY	QTY	PART NUMBER	DESCRIPTION
1	198.703 ft^3	198.703 ft^3	100011429	CONCRETE MIX GENERIC 7000 PSI
2	1	6	100041711	GRATE 1636 STEEL GALV 19-W-4 GRATING PACIFIC
3	1	14	100007133	ANCHOR UTILITY .671DIA 7.625-SLAB GALV P75 8UA671
4	1	2	100040738	GROUND INSERT BOTTLE ROCKET 1/2-13 BRONZE w/ 0.375x36" STEEL ROD
5	1	4	100034004	ANCHOR RAPID LIFT 8T PLATE ANCHOR MB RL-24
6	1	1	300153901	REINFORCING MAT 300153901
7	1	1	300153902	REINFORCING MAT 300153902

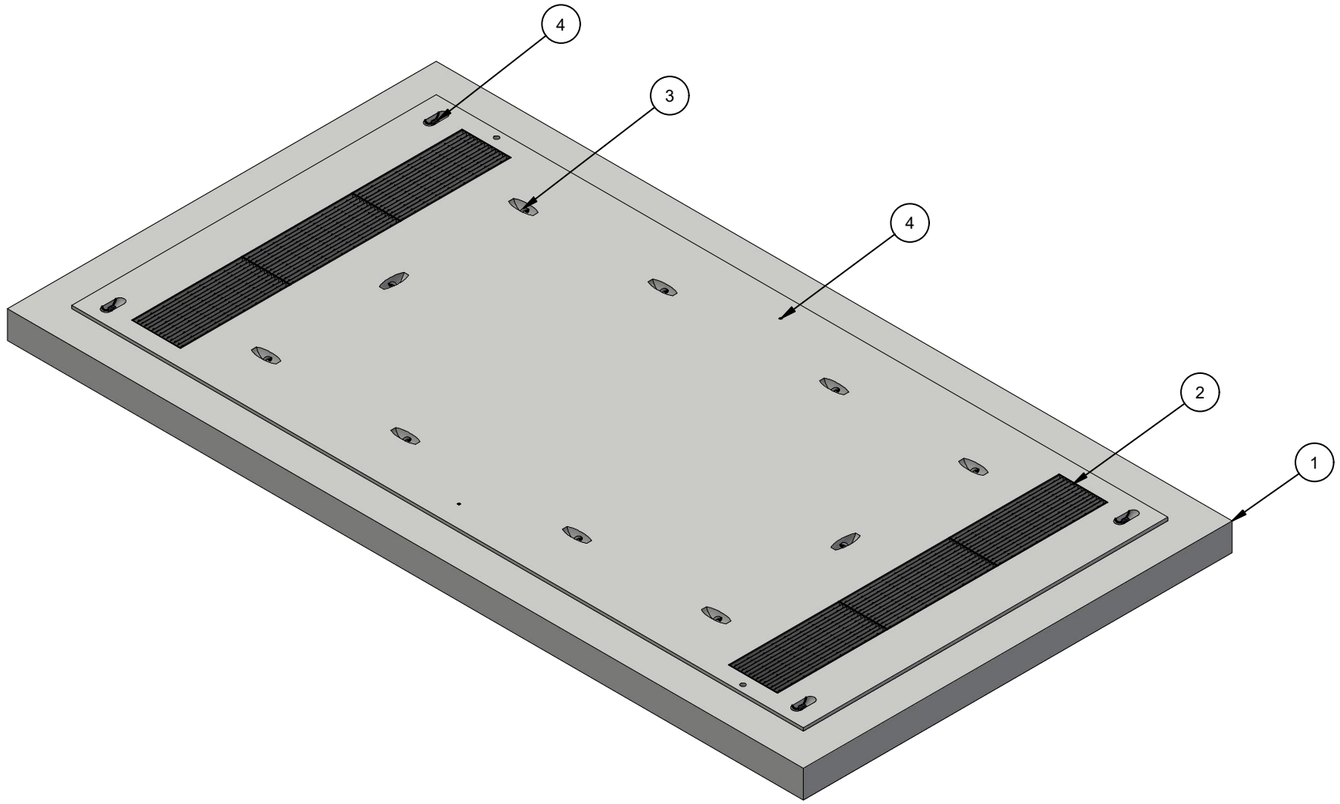

ISO VIEW

LIFTING NOTES
■ THIS CONCRETE PRODUCT IS DESIGNED TO BE LIFTED AT 4500 PSI WITH 4 LIFT CONNECTIONS EQUALLY LOADED TO 4 LIFTING POINTS AT A MINIMUM 60° SLING ANGLE, MEASURED FROM HORIZONTAL.
*All rigging shall be design by a qualified professional. Loading diagrams show illustrations of possible rigging setups to achieve the required sling angle and load leg equalization. Other valid rigging configurations are possible. A qualified professional must be consulted prior to lifting.

RIGGING DIAGRAM*	C

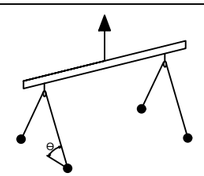

BURY DEPTH:	10.5' - 11.5' to Top		
WATER LEVEL:	3.0'	APPROX. WEIGHT:	30174.59 Lbs
DESIGN SPEC:	ACI 318,ASTM C857	LOADING SPEC:	A-16 (AASHTO HS20-44)
REINFORCEMENT TYPE:	Rebar	LIFTING TYPE:	A-Anchor

JENSEN PRECAST EST. 1968

WWW.JENSENPRECAST.COM

©2024 Jensen Precast- All rights reserved.
All materials appearing as Jensen Precast documents and the like are proprietary work product and are protected under U.S. copyright and other laws.
Unless in conjunction with business conducted with Jensen Precast, any use of Jensen Precast work product without express, written consent is prohibited, and recipient is prohibited from distributing any and all work product to non-approved third parties under penalty of civil action.

CHANGE HISTORY			
NO.	DESCRIPTION	DATE	BY
A	DRAWING CREATED	9/15/2023	E.Fine

DESCRIPTION:	Vault 120240x10 Slab Bottom Sump CASTING LAYOUT		REV: A-2
PART NUMBER:	200079952	DRAWN BY:	E.Fine
CREATED:	9/13/2023	MODIFIED:	5/10/2024
			SHEET: 1 OF 2

200079952.idw

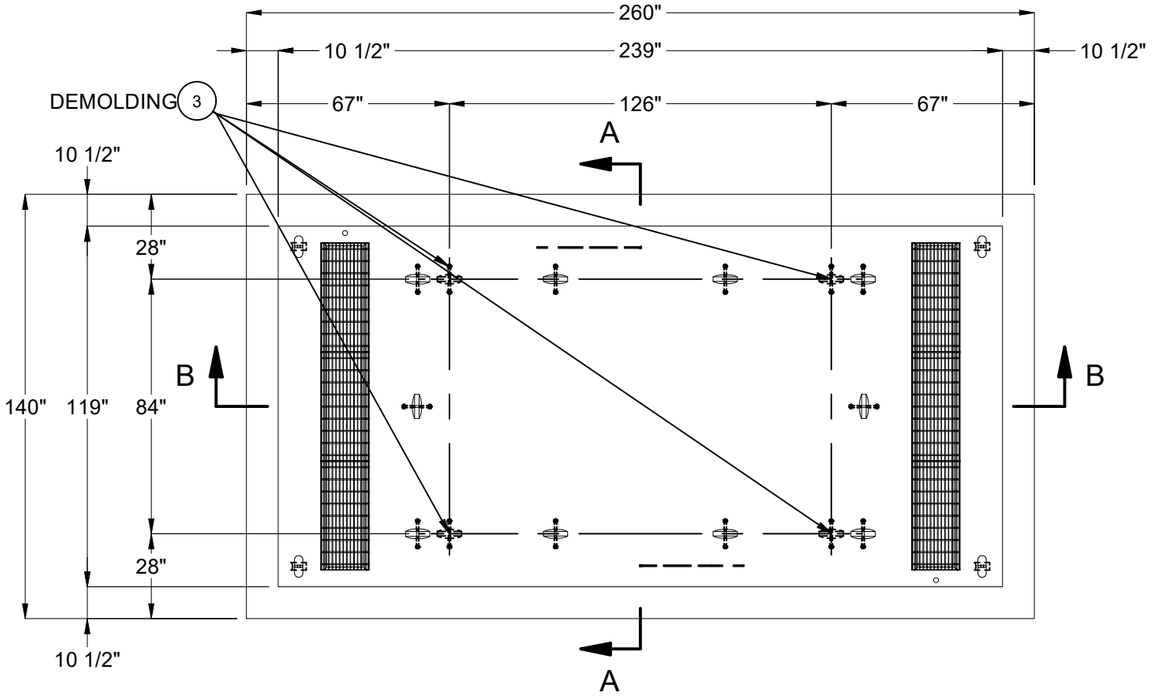

PLAN VIEW
(SHOWING DEMOLDING LIFTLERS)

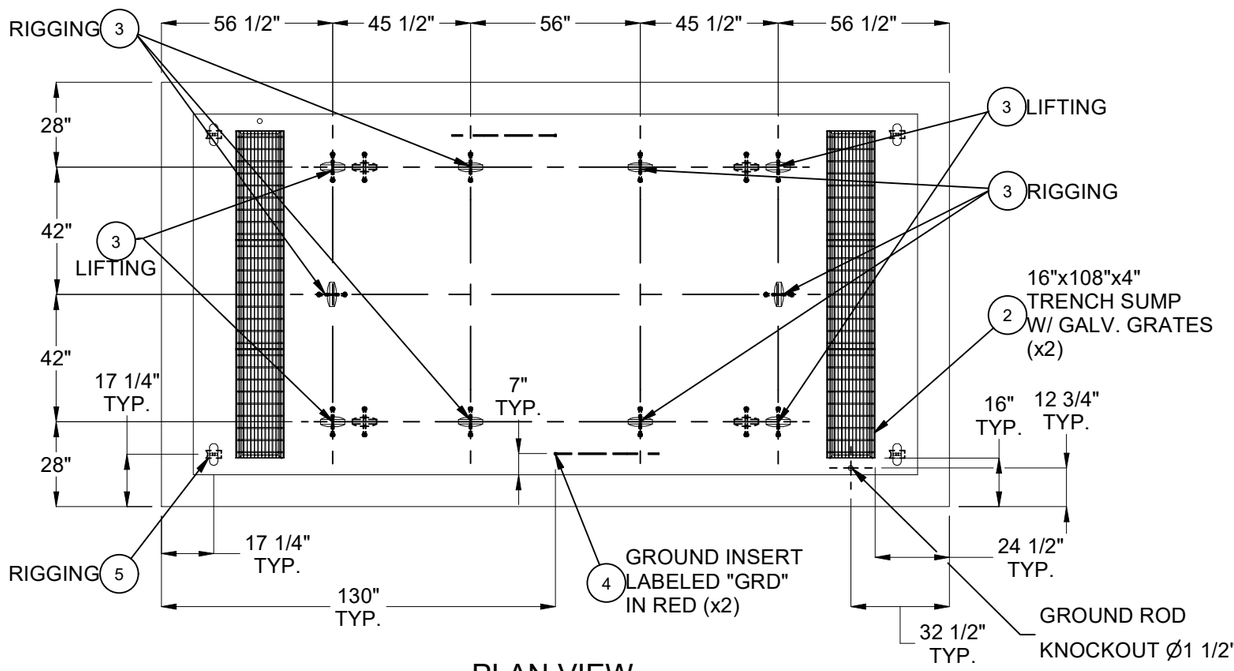

PLAN VIEW
(SHOWING OBJECT DIMENSIONS)

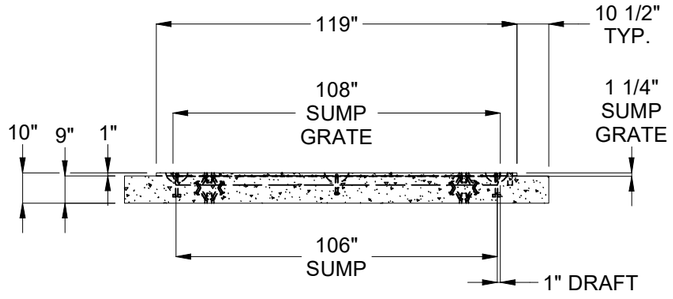

SECTION A-A
(OPPOSITE SIDE SIMILAR)

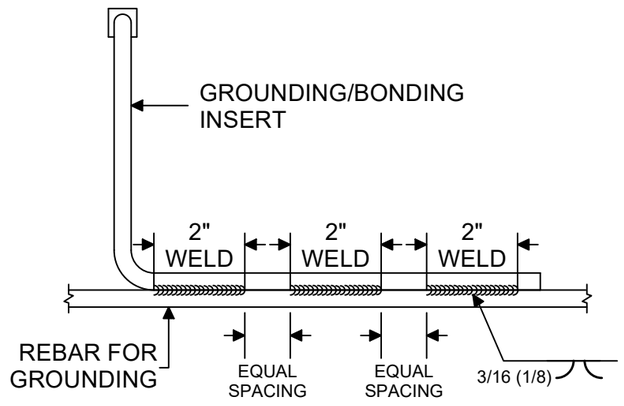

CONNECTION DETAIL

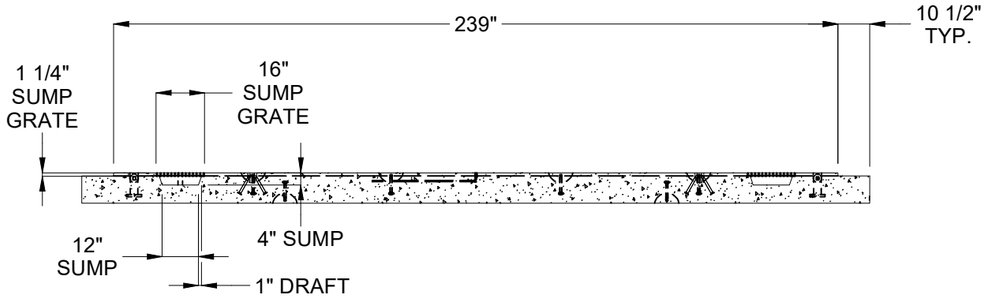

SECTION B-B
(OPPOSITE SIDE SIMILAR)

BURY DEPTH:	10.5' - 11.5' to Top		
WATER LEVEL:	3.0'	APPROX. WEIGHT:	30174.59 Lbs
DESIGN SPEC:	ACI 318,ASTM C857	LOADING SPEC:	A-16 (AASHTO HS20-44)
REINFORCEMENT TYPE:	Rebar	LIFTING TYPE:	A-Anchor

JENSEN PRECAST EST. 1968
WWW.JENSENPRECAST.COM

©2024 Jensen Precast- All rights reserved.
All materials appearing as Jensen Precast documents and the like are proprietary work product and are protected under U.S. copyright and other laws.
Unless in conjunction with business conducted with Jensen Precast, any use of Jensen Precast work product without express, written consent is prohibited, and recipient is prohibited from distributing any and all work product to non-approved third parties under penalty of civil action.

DESCRIPTION:	Vault 120240x10 Slab Bottom Sump CASTING DRAWING		REV: A-2
PART NUMBER:	200079952	DRAWN BY:	E.Fine
CREATED:	9/13/2023	MODIFIED:	5/10/2024
			SHEET: 2 OF 2

200079952.idw