DESIGN NOTES
■ FOR COMPLETE DESIGN AND PRODUCT INFORMATION CONTACT JENSEN PRECAST.

BILL OF MATERIALS

ITEM	UNIT QTY	QTY	PART NUMBER	DESCRIPTION
1	123.841 ft^3	123.841 ft^3	100011429	CONCRETE MIX GENERIC 7000 PSI
2	1	6	100040738	GROUND INSERT BOTTLE ROCKET 1/2-13 BRONZE w/ 0.375x36" STEEL ROD
3	1	4	100002766	INSERT FERRULE LOOP 5/8 X 3-1/2 PLATED FX-5
4	1	4	100007133	ANCHOR UTILITY .671DIA 7.625-SLAB GALV P75 8UA671
5	1	1	300153864	REINFORCING MAT 300153864
6	1	1	300153876	REINFORCING MAT 300153876

200079848.idw

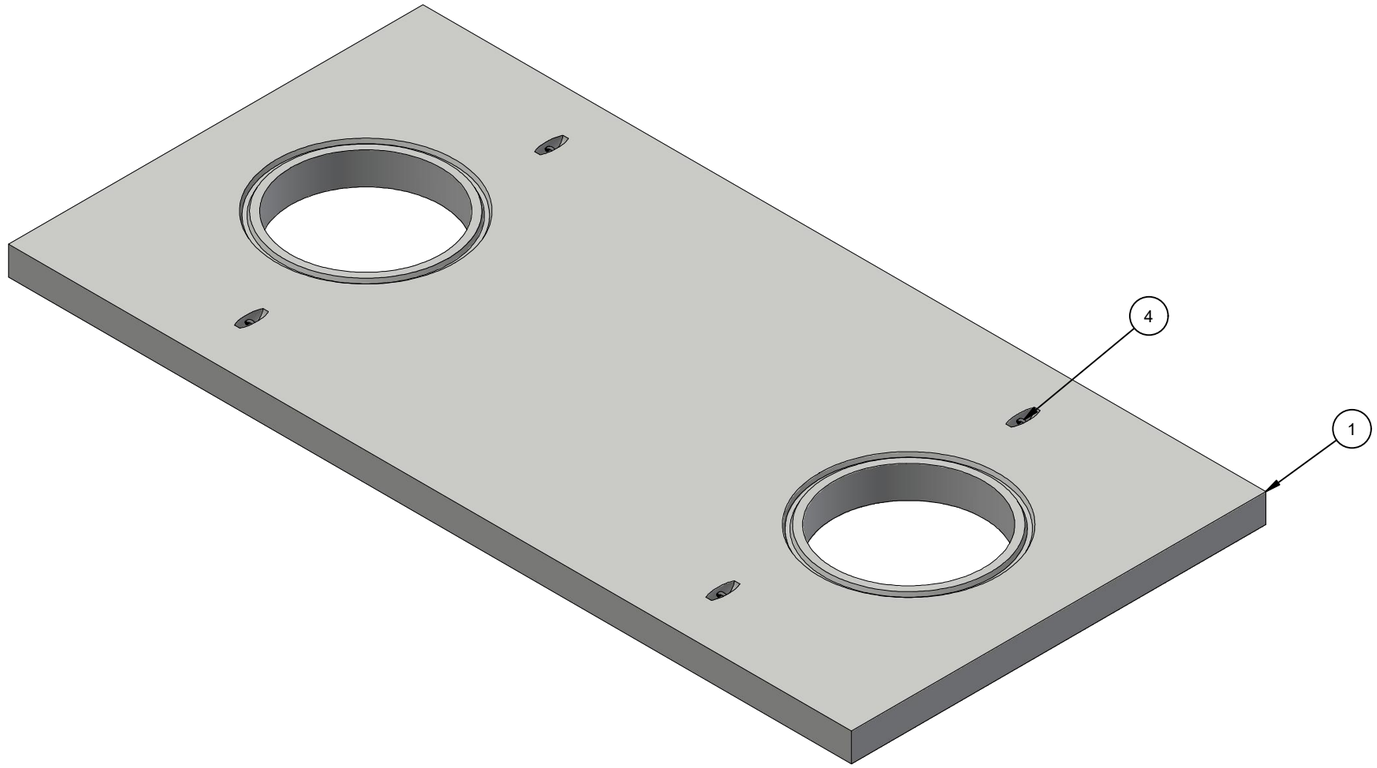

ISO VIEW

LIFTING NOTES
■ THIS CONCRETE PRODUCT IS DESIGNED TO BE LIFTED AT 3500 PSI WITH 4 LIFT CONNECTIONS EQUALLY LOADED TO 4 LIFTING POINTS AT A MINIMUM 60° SLING ANGLE, MEASURED FROM HORIZONTAL.
*All rigging shall be design by a qualified professional. Loading diagrams show illustrations of possible rigging setups to achieve the required sling angle and load leg equalization. Other valid rigging configurations are possible. A qualified professional must be consulted prior to lifting.

RIGGING DIAGRAM*	C

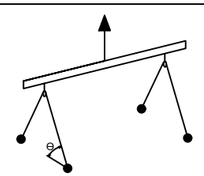

BURY DEPTH:	0.5' - 1.5' to Top		
WATER LEVEL:	3.0'	APPROX. WEIGHT:	18627.02 Lbs
DESIGN SPEC:	ACI 318,ASTM C857	LOADING SPEC:	A-16 (AASHTO HS20-44)
REINFORCEMENT TYPE:	Rebar	LIFTING TYPE:	A-Anchor

JENSEN PRECAST EST. 1968

WWW.JENSENPRECAST.COM

©2024 Jensen Precast- All rights reserved.
All materials appearing as Jensen Precast documents and the like are proprietary work product and are protected under U.S. copyright and other laws.
Unless in conjunction with business conducted with Jensen Precast, any use of Jensen Precast work product without express, written consent is prohibited, and recipient is prohibited from distributing any and all work product to non-approved third parties under penalty of civil action.

CHANGE HISTORY			
NO.	DESCRIPTION	DATE	BY
A	DRAWING CREATED	8/4/2023	E.Fine

DESCRIPTION:	Vault 96216x9 Slab Top 42"E, 42"E CASTING LAYOUT		REV: A-2
PART NUMBER:	200079848	DRAWN BY:	E.Fine
CREATED:	9/11/2023	MODIFIED:	5/17/2024
			SHEET: 1 OF 2

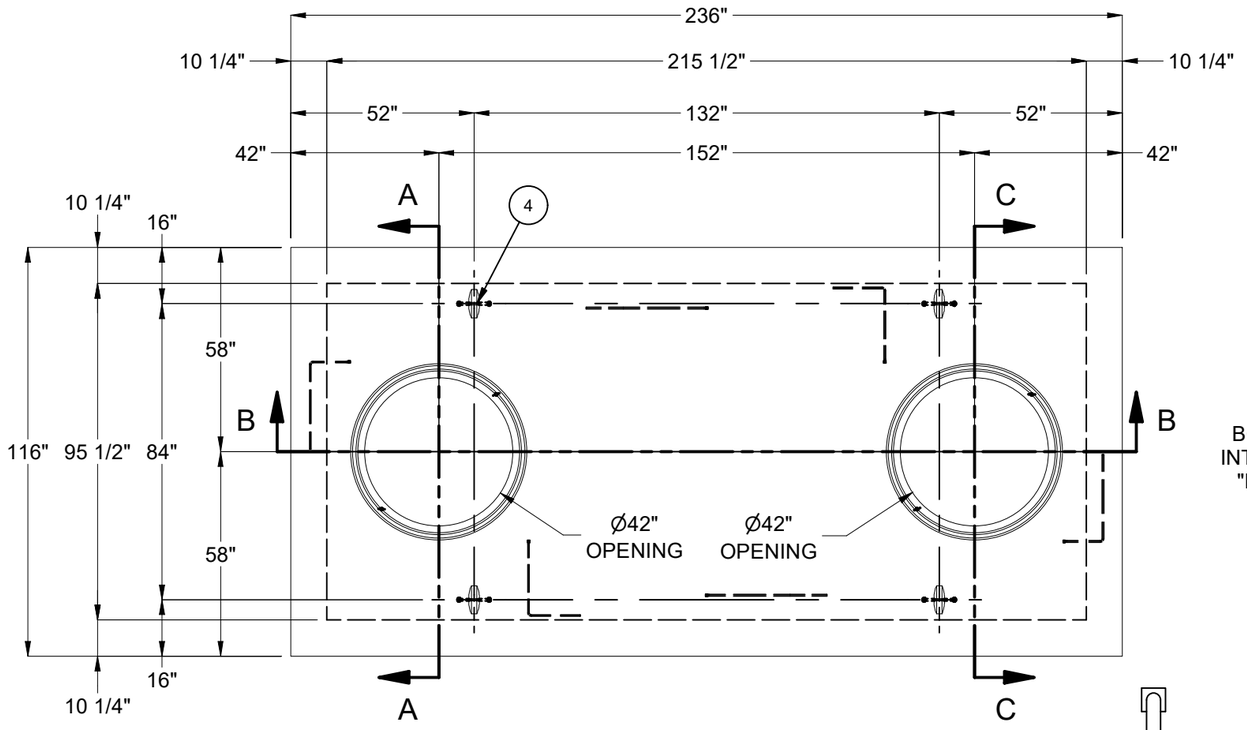

PLAN VIEW
(SHOWING LIFTING)

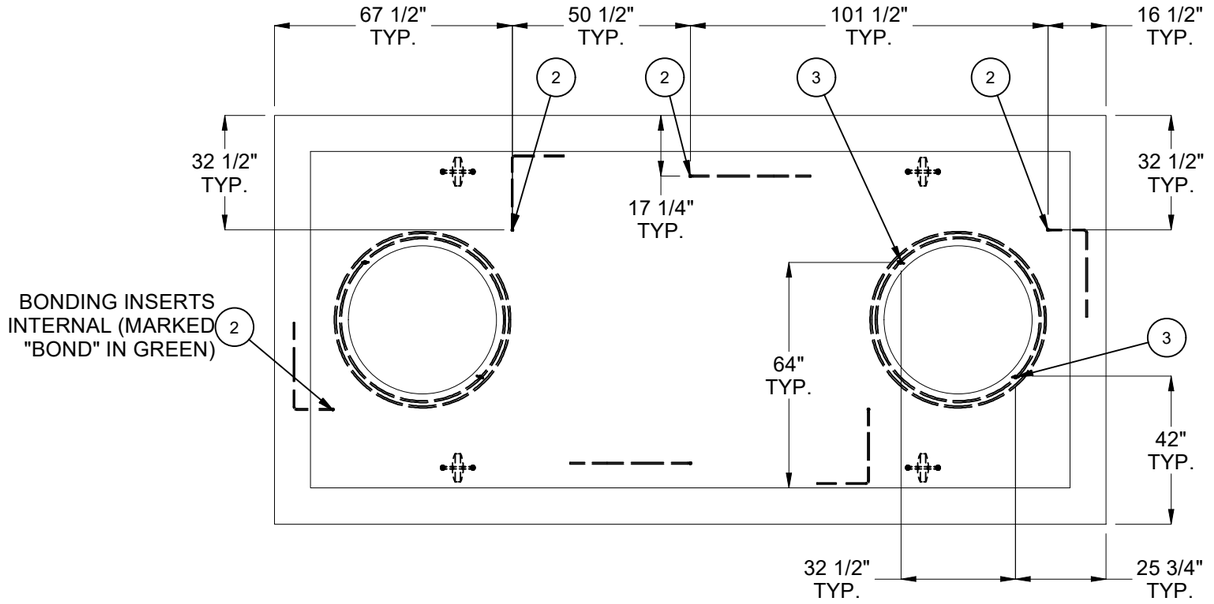

PLAN VIEW - BOTTOM FACE OF SLAB
(SHOWING OBJECT DIMENSIONS)

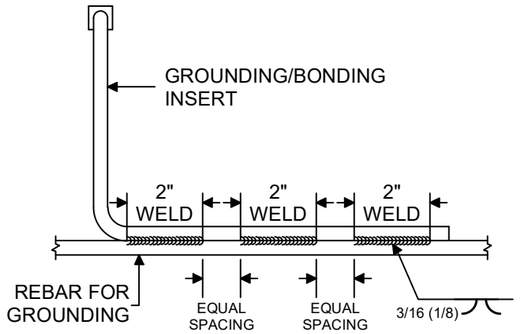

CONNECTION DETAIL

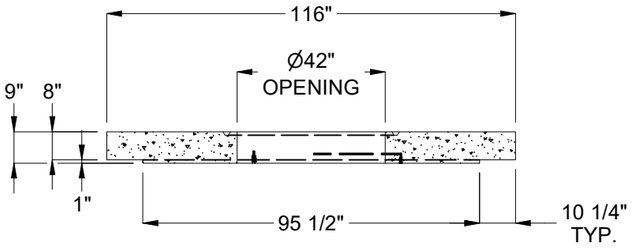

SECTION A-A

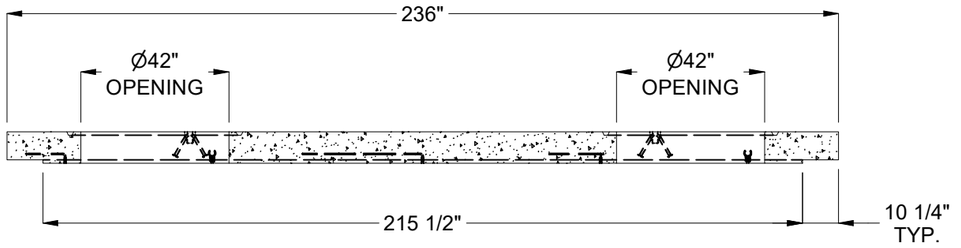

SECTION B-B

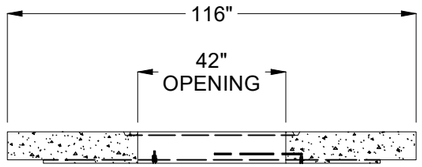

SECTION C-C

BURY DEPTH:	0.5' - 1.5' to Top		
WATER LEVEL:	3.0'	APPROX. WEIGHT:	18627.02 Lbs
DESIGN SPEC:	ACI 318,ASTM C857	LOADING SPEC:	A-16 (AASHTO HS20-44)
REINFORCEMENT TYPE:	Rebar	LIFTING TYPE:	A-Anchor

JENSEN PRECAST EST. 1968
WWW.JENSENPRECAST.COM

©2024 Jensen Precast- All rights reserved.
All materials appearing as Jensen Precast documents and the like are proprietary work product and are protected under U.S. copyright and other laws.
Unless in conjunction with business conducted with Jensen Precast, any use of Jensen Precast work product without express, written consent is prohibited, and recipient is prohibited from distributing any and all work product to non-approved third parties under penalty of civil action.

DESCRIPTION:	Vault 96216x9 Slab Top 42"E, 42"E CASTING DRAWING		REV: A-2
PART NUMBER:	200079848	DRAWN BY:	E.Fine
CREATED:	9/11/2023	MODIFIED:	5/17/2024
			SHEET: 2 OF 2

200079848.idw